PART N-01 ~ N-91

Diameter
● Shielded ○ non-Shielded
Switching Distance Sn mm
Housing Material
● With LED ○ Without LED

Dimensions (unit: mm)

Operating Voltage
Ripple
No Load Current
Max. Load Current
Leakge Current
Surge Current
Min. Load Current
Voltage Drop
Switching Frequency
Response Time
Switching Hysteresis
Repeat Accuracy
Protection Category
Operating Temperature
Temperature Drift
Short Circuit Protection
Overload Trip Point
Time Delay Before Availability
EMC
Shock / Vibration
Material Active Face
DC 3 wire 10-30V NPN N.O.
DC 3 wire 10-30V NPN N.C.
DC 3 wire 10-30V PNP N.O.
DC 3 wire 10-30V PNP N.C.
DC 4 wire 10-30V Changeover PNP (N.O. & N.C.)
DC 4 wire 10-30V Changeover NPN (N.O. & N.C.)
DC 2 wire 10-60V N.O.
DC 2 wire 10-60V N.C.
DC 3 wire 10-55v NPN N.O. or NAMUR
DC 3 wire 10-55v NPN N.C.
DC 3 wire 10-55v PNP N.O.
DC 3 wire 10-55v PNP N.C.

Remark

Cable 2M (PUR)
Weight

METAL FACE INDUCTIVE PROXIMITY SWITCH

● Description

SCAN metal face inductive proximity sensors is total stainless steel housing from solid stainless steel stock...no two piece welds, no ultra thin foils...no short cuts. this provides a higher level of protection for more reliable operation and longer life in harsh environments.

The sensors stand up to abrasion and impact caused by flying metal chips, grit, and misaligned or vibrating targets. in addition, the stainless steel body resists corrosion and chemical attack.

In addition to standard all-metal sensing models, the series is available in ferrous and non-ferrous selective versions to detect only a specific type of metal. ferrous only models will detect only ferrous metals such as steel, iron, nickel or cobalt. non-ferrous only modele will detect only metals that do not have ferrous content such as aluminum, brass or copper.

A typical application for ferrous only sensors would be in workcell applications where cutting tools, tool pallets and fixtures must be detected for proper workpiece manipulation. the sensors detect ferrous objects while ignoring aluminum. non-ferrous only sensors would be used to detect the presence or absence of aluminum components such as engine, transmission and aircraft forgings, without sensing the ferrous fixtures holding them.

These sensors are available in a standard 12mm, 18mm, 30mm diameter, and are epoxy filled for shock/vibration resistance and heat tolerance.

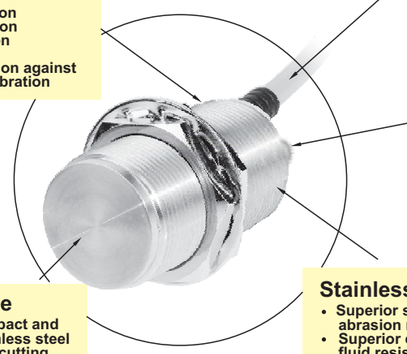

Robust electrical design
- AC/DC 2-wire or DC 2, 3, 4-wire
- Short circuit protection
- Overload protection
- Reverse polarity protection
- Radio frequency protection
- Transient noise protection
- False pulse protection
- Epoxy potted for protection against
- mechanical shock and vibration

Output connect mode
- PVC cable 2m
- Euro QD, Mini QD for DC type
- Micro QD, Mini QD for AC type

LED output indicator

Stainless steel face
- Superior strength of impact and abrasion resistant stainless steel
- Superior chemical and cutting fluid resistance
- leakproof
- Sensing face is 20 mil thick

Stainless steel barrel
- Superior strength of impact and abrasion resistant stainless steel
- Superior chemical and cutting fluid resistance
- leakproof
- 12mm, 18mm and 30mm diameters to fit what you need

DC METAL FACE INDUCTIVE PROXIMITY SWITCH

M 8			M 8			M 8		
●	○		●	○		●	○	
1 mm	2 mm		1 mm	2 mm		1 mm	2 mm	
Stainless steel			Stainless steel			Stainless steel		
●			●			●		
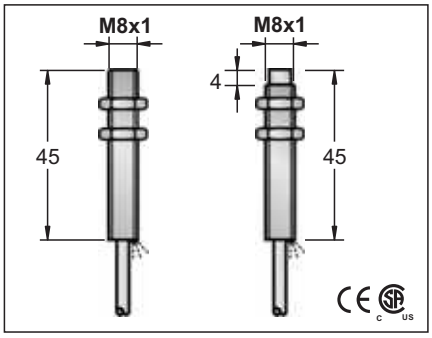			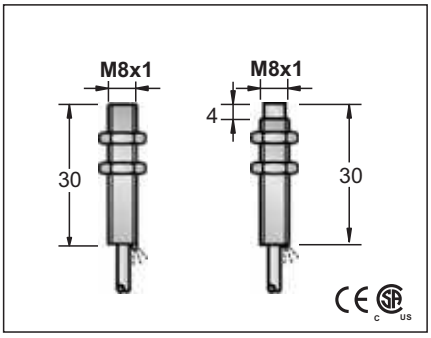			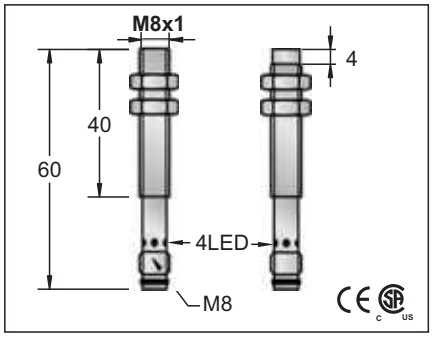		
10-30VDC or 10-55VDC			10-30VDC or 10-55VDC			10-30VDC or 10-55VDC		
<10%			<10%			<10%		
<10mA			<10mA			<10mA		
200mA			200mA			200mA		
<0.01mA			<0.01mA			<0.01mA		
-			-			-		
-			-			-		
<1.5V			<1.5V			<1.5V		
500HZ			500HZ			500HZ		
0.1ms/0.1ms			0.1ms/0.1ms			0.1ms/0.1ms		
<15%(Sr)			<15%(Sr)			<15%(Sr)		
<1.0%(Sr)			<1.0%(Sr)			<1.0%(Sr)		
IP67			IP67			IP67		
-25°C - +70°C			-25°C - +70°C			-25°C - +70°C		
<10%(Sr)			<10%(Sr)			<10%(Sr)		
YES			YES			YES		
220mA			220mA			220mA		
<10ms			<10ms			<10ms		
RFI>3V/m / EFT>1KV / ESD>4KV (contact)			RFI>3V/m / EFT>1KV / ESD>4KV (contact)			RFI>3V/m / EFT>1KV / ESD>4KV (contact)		
IEC 60947-5-2,Part 7.4.1 / IEC 60947-5-2,Part 7.4.2			IEC 60947-5-2,Part 7.4.1 / IEC 60947-5-2,Part 7.4.2			IEC 60947-5-2,Part 7.4.1 / IEC 60947-5-2,Part 7.4.2		
Stainless steel			Stainless steel			Stainless steel		
FCS1-0801N-A3U2	1	FCS2-0802N-A3U2	FCS1-0801N-A3S2	1	FCS2-0802N-A3S2	FCS1-0801N-ACU3	29	FCS2-0802N-ACU3
FCS1-0801N-B3U2	2	FCS2-0802N-B3U2	FCS1-0801N-B3S2	2	FCS2-0802N-B3S2	FCS1-0801N-BCU3	29	FCS2-0802N-BCU3
FCS1-0801P-A3U2	3	FCS2-0802P-A3U2	FCS1-0801P-A3S2	3	FCS2-0802P-A3S2	FCS1-0801P-ACU3	30	FCS2-0802P-ACU3
FCS1-0801P-B3U2	4	FCS2-0802P-B3U2	FCS1-0801P-B3S2	4	FCS2-0802P-B3S2	FCS1-0801P-BCU3	30	FCS2-0802P-BCU3
FCS1-0801C-A2U2	7	FCS2-0802C-A2U2	FCS1-0801C-A2S2	7	FCS2-0802C-A2S2	FCS1-0801C-ACU3	39	FCS2-0802C-ACU3
FCS1-0801C-B2U2	8	FCS2-0802C-B2U2	FCS1-0801C-B2S2	8	FCS2-0802C-B2S2	FCS1-0801C-BCU3	77	FCS2-0802C-BCU3
			Please see Page 18 for details and specifications of DC 2-Wire models on this page.					
3φ3x0.15			3φ3x0.15					
Approx.33 g	Approx.32 g		Approx.33 g	Approx.32 g		Approx.18 g	Approx.17 g	

DC METAL FACE INDUCTIVE PROXIMITY SWITCH

M 8			M 8			M 8		
●	○		●	○		●	○	
1 mm	2 mm		1 mm	2 mm		1 mm	2 mm	
Stainless steel			Stainless steel			Stainless steel		
●			●			●		
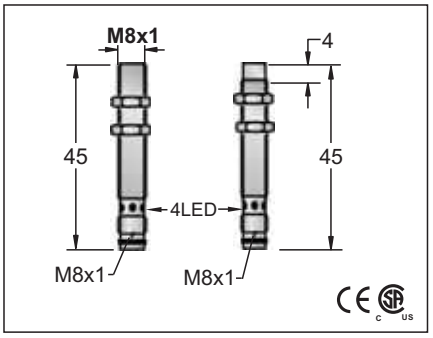			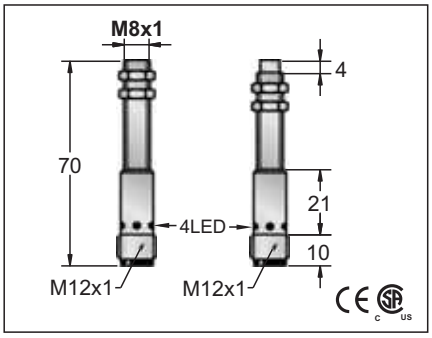			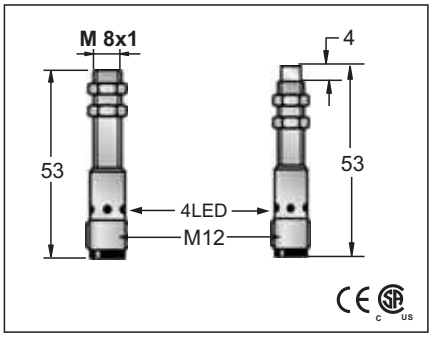		
10-30VDC or 10-55VDC			10-30VDC or 10-55VDC			10-30VDC or 10-55VDC		
<10%			<10%			<10%		
<10mA			<10mA			<10mA		
200mA			200mA			200mA		
<0.01mA			<0.01mA			<0.01mA		
-			-			-		
-			-			-		
<1.5V			<1.5V			<1.5V		
500HZ			500HZ			500HZ		
0.1ms/0.1ms			0.1ms/0.1ms			0.1ms/0.1ms		
<15%(Sr)			<15%(Sr)			<15%(Sr)		
<1.0%(Sr)			<1.0%(Sr)			<1.0%(Sr)		
IP67			IP67			IP67		
-25°C - +70°C			-25°C - +70°C			-25°C - +70°C		
<10%(Sr)			<10%(Sr)			<10%(Sr)		
YES			YES			YES		
220mA			220mA			220mA		
<10ms			<10ms			<10ms		
RFI>3V/m / EFT>1KV / ESD>4KV (contact)			RFI>3V/m / EFT>1KV / ESD>4KV (contact)			RFI>3V/m / EFT>1KV / ESD>4KV (contact)		
IEC 60947-5-2,Part 7.4.1 / IEC 60947-5-2,Part 7.4.2			IEC 60947-5-2,Part 7.4.1 / IEC 60947-5-2,Part 7.4.2			IEC 60947-5-2,Part 7.4.1 / IEC 60947-5-2,Part 7.4.2		
Stainless steel			Stainless steel			Stainless steel		
FCS1-0801N-ACS3	29	FCS2-0802N-ACS3	FCS1-0801N-ARU4	33	FCS2-0802N-ARU4	FCS1-0801N-ARS4	33	FCS2-0802N-ARS4
FCS1-0801N-BCS3	29	FCS2-0802N-BCS3	FCS1-0801N-BRU4	34	FCS2-0802N-BRU4	FCS1-0801N-BRS4	34	FCS2-0802N-BRS4
FCS1-0801P-ACS3	30	FCS2-0802P-ACS3	FCS1-0801P-ARU4	35	FCS2-0802P-ARU4	FCS1-0801P-ARS4	35	FCS2-0802P-ARS4
FCS1-0801P-BCS3	30	FCS2-0802P-BCS3	FCS1-0801P-BRU4	36	FCS2-0802P-BRU4	FCS1-0801P-BRS4	36	FCS2-0802P-BRS4
FCS1-0801C-ACS3	39	FCS2-0802C-ACS3	FCS1-0801C-ARU4	40	FCS2-0802C-ARU4	FCS1-0801C-ARS4	40	FCS2-0802C-ARS4
			FCS1-0801C-BRU4	78	FCS2-0802C-BRU4	FCS1-0801C-BRS4	78	FCS2-0802C-BRS4
			Please see Page 18 for details and specifications of DC 2-Wire models on this page.					
3 ø 3x0.15			3 ø 3x0.15					
Approx.33 g	Approx.32 g		Approx.33 g	Approx.32 g		Approx.18 g	Approx.17 g	

DC METAL FACE INDUCTIVE PROXIMITY SWITCH

M 12	
●	○
2 mm	4 mm
stainless steel	
●	

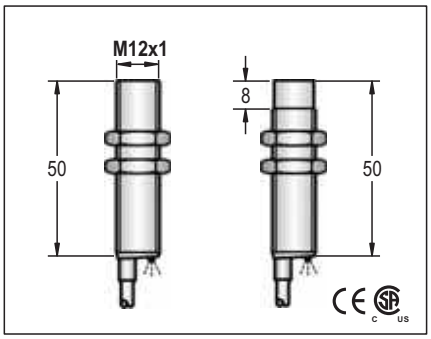

10-30VDC or 10-55VDC	
<10%	
<10mA	<20mA
200mA	
<0.01mA	
-	
-	
<1.5V or <1.0V or <2.0V	
2KHZ	1KHZ
0.1ms/0.1ms	0.2ms/0.2ms
<15%(Sr)	
<1.0%(Sr)	
IP67	
-25°C – +70°C	
<10%(Sr)	
YES	
220mA	
<10ms	
RFI>3V/m / EFT>1KV / ESD>4KV (contact)	
IEC 60947-5-2,Part 7.4.1 / IEC 60947-5-2,Part 7.4.2	
Stainless steel	

FCS1-1202N-A3U2	1	FCS2-1204N-A3U2
FCS1-1202N-B3U2	2	FCS2-1204N-B3U2
FCS1-1202P-A3U2	3	FCS2-1204P-A3U2
FCS1-1202P-B3U2	4	FCS2-1204P-B3U2
FCS1-1202P-S4U2	6	FCS2-1204P-S4U2
FCS1-1202N-S4U2	5	FCS2-1204N-S4U2
FCS1-1202C-A2U2	7	FCS2-1204C-A2U2
FCS1-1202C-B2U2	8	FCS2-1204C-B2U2
HCS1-1202N-A3U2	1	HCS2-1204N-A3U2
HCS1-1202N-B3U2	2	HCS2-1204N-B3U2
HCS1-1202P-A3U2	3	HCS2-1204P-A3U2
HCS1-1202P-B3U2	4	HCS2-1204P-B3U2

4∅3x0.15	
approx.67 g	approx.65 g

M 12	
●	○
2 mm	4 mm
stainless steel	
●	

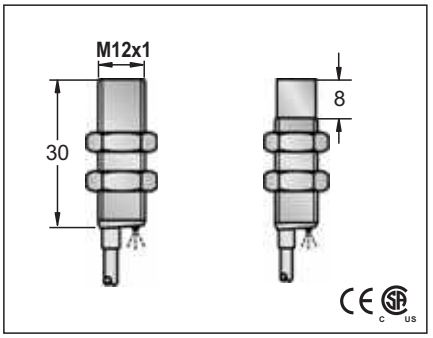

10-30VDC or 10-55VDC	
<10%	
<10mA	<20mA
200mA	
<0.01mA	
-	
-	
<1.5V or <1.0V or <2.0V	
2KHZ	1KHZ
0.1ms/0.1ms	0.2ms/0.2ms
<15%(Sr)	
<1.0%(Sr)	
IP67	
-25°C – +70°C	
<10%(Sr)	
YES	
220mA	
<10ms	
RFI>3V/m / EFT>1KV / ESD>4KV (contact)	
IEC 60947-5-2,Part 7.4.1 / IEC 60947-5-2,Part 7.4.2	
Stainless steel	

FCS1-1202N-A3S2	1	FCS2-1204N-A3S2
FCS1-1202N-B3S2	2	FCS2-1204N-B3S2
FCS1-1202P-A3S2	3	FCS2-1204P-A3S2
FCS1-1202P-B3S2	4	FCS2-1204P-B3S2
FCS1-1202C-A2S2	7	FCS2-1204C-A2S2
FCS1-1202C-B2S2	8	FCS2-1204C-B2S2

Please see Page 18 for details and specifications of DC 2-Wire models on this page.

approx.31 g	approx.30 g

M 12	
●	○
2 mm	4 mm
stainless steel	
●	

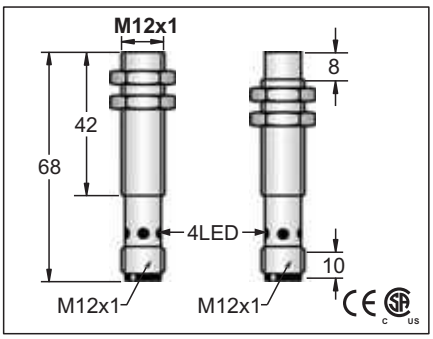

10-30VDC or 10-55VDC	
<10%	
<10mA	<20mA
200mA	
<0.01mA	
-	
-	
<1.5V or <1.0V or <2.0V	
2KHZ	1KHZ
0.1ms/0.1ms	0.2ms/0.2ms
<15%(Sr)	
<1.0%(Sr)	
IP67	
-25°C – +70°C	
<10%(Sr)	
YES	
220mA	
<10ms	
RFI>3V/m / EFT>1KV / ESD>4KV (contact)	
IEC 60947-5-2,Part 7.4.1 / IEC 60947-5-2,Part 7.4.2	
Stainless steel	

FCS1-1202N-ARU4	33	FCS2-1204N-ARU4
FCS1-1202N-BRU4	34	FCS2-1204N-BRU4
FCS1-1202P-ARU4	35	FCS2-1204P-ARU4
FCS1-1202P-BRU4	36	FCS2-1204P-BRU4
FCS1-1202P-SRU4	38	FCS2-1204P-SRU4
FCS1-1202N-SRU4	37	FCS2-1204N-SRU4
FCS1-1202C-ARU4	40	FCS2-1204C-ARU4
FCS1-1202C-BRU4	78	FCS2-1204C-BRU4
HCS1-1202N-ARU4	33	HCS2-1204N-ARU4
HCS1-1202N-BRU4	34	HCS2-1204N-BRU4
HCS1-1202P-ARU4	35	HCS2-1204P-ARU4
HCS1-1202P-BRU4	36	HCS2-1204P-BRU4

5.0∅ 44x0.1	
approx.153 g	approx.144 g

DC METAL FACE INDUCTIVE PROXIMITY SWITCH

M 12	
●	○
2 mm	4 mm
stainless steel	
●	

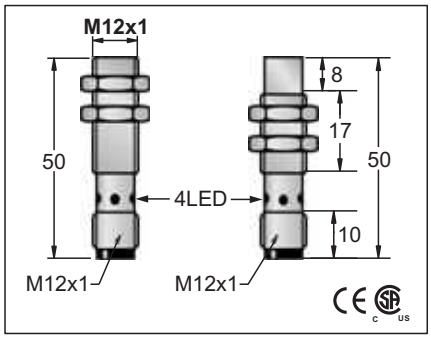

M 18	
●	○
5 mm	8 mm
stainless steel	
●	

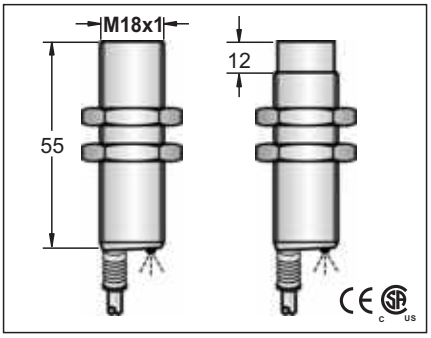

M 18	
●	○
5 mm	8 mm
stainless steel	
●	

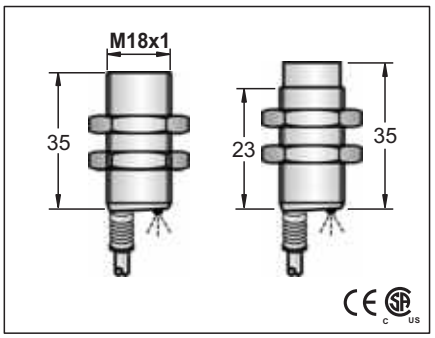

10-30VDC or 10-55VDC		
<10%		
<10mA	<20mA	
200mA		
<0.01mA		
-		
-		
<1.5V or <1.0V or <2.0V		
2KHZ	1KHZ	
0.1ms/0.1ms	0.2ms/0.2ms	
<15%(Sr)		
<1.0%(Sr)		
IP67		
-25°C－+70℃		
<10%(Sr)		
YES		
220mA		
<10ms		
RFI>3V/m / EFT>1KV / ESD>4KV (contact)		
IEC 60947-5-2,Part 7.4.1 / IEC 60947-5-2,Part 7.4.2		
Stainless steel		
FCS1-1202N-ARS4	33	FCS2-1204N-ARS4
FCS1-1202N-BRS4	34	FCS2-1204N-BRS4
FCS1-1202P-ARS4	35	FCS2-1204P-ARS4
FCS1-1202P-BRS4	36	FCS2-1204P-BRS4
FCS1-1202C-ARS4	40	FCS2-1204C-ARS4
FCS1-1202C-BRS4	78	FCS2-1204C-BRS4

DC METAL FACE INDUCTIVE PROXIMITY SWITCH

M 18			M 18			M 18		
●	○		●	○		●	○	
5 mm	8 mm		5 mm	8 mm		5 mm	8 mm	
stainless steel			stainless steel			stainless steel		
●			●			●		
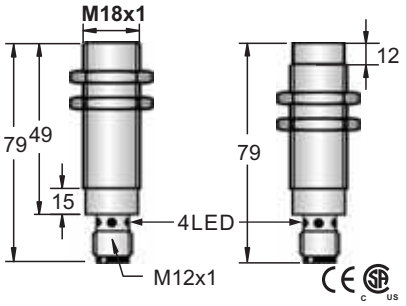			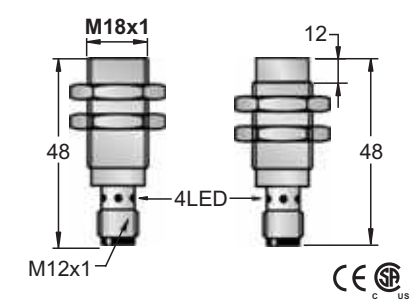			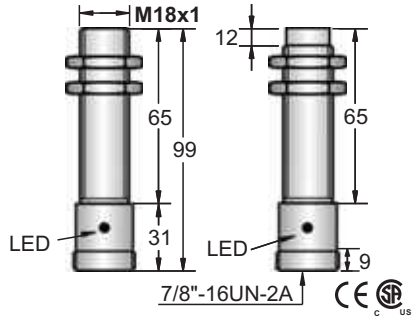		
10-30VDC or 10-55VDC			10-30VDC or 10-55VDC			10-30VDC or 10-55VDC		
<10%			<10%			<10%		
<10mA	<20mA		<10mA	<20mA		<10mA	<20mA	
200mA			200mA			200mA		
<0.01mA			<0.01mA			<0.01mA		
-			-			-		
-			-			-		
<1.5V or <1.0V or <2.0V			<1.5V or <1.0V or <2.0V			<1.5V or <1.0V or <2.0V		
1KHZ	500HZ		1KHZ	500KHZ		1KHZ	500KHZ	
0.2ms/0.2ms	0.5ms/0.5ms		0.2ms/0.2ms	0.5ms/0.5ms		0.2ms/0.2ms	0.5ms/0.5ms	
<15%(Sr)			<15%(Sr)			<15%(Sr)		
<1.0%(Sr)			<1.0%(Sr)			<1.0%(Sr)		
IP67			IP67			IP67		
-25°C – +70°C			-25°C – +70°C			-25°C – +70°C		
<10%(Sr)			<10%(Sr)			<10%(Sr)		
YES			YES			YES		
220mA			220mA			220mA		
<10ms			<10ms			<10ms		
RFI>3V/m / EFT>1KV / ESD>4KV (contact)			RFI>3V/m / EFT>1KV / ESD>4KV (contact)			RFI>3V/m / EFT>1KV / ESD>4KV (contact)		
IEC 60947-5-2,Part 7.4.1 / IEC 60947-5-2,Part 7.4.2			IEC 60947-5-2,Part 7.4.1 / IEC 60947-5-2,Part 7.4.2			IEC 60947-5-2,Part 7.4.1 / IEC 60947-5-2,Part 7.4.2		
Stainless steel			Stainless steel			Stainless steel		
FCS1-1805N-ARU4	33	FCS2-1808N-ARU4	FCS1-1805N-ARS4	33	FCS2-1808N-ARS4			
FCS1-1805N-BRU4	34	FCS2-1808N-BRU4	FCS1-1805N-BRS4	34	FCS2-1808N-BRS4			
FCS1-1805P-ARU4	35	FCS2-1808P-ARU4	FCS1-1805P-ARS4	35	FCS2-1808P-ARS4			
FCS1-1805P-BRU4	36	FCS2-1808P-BRU4	FCS1-1805P-BRS4	36	FCS2-1808P-BRS4			
FCS1-1805P-SRU4	38	FCS2-1808P-SRU4						
FCS1-1805N-SRU4	37	FCS2-1808N-SRU4						
FCS1-1805C-ARU4	40	FCS2-1808C-ARU4	FCS1-1805C-ARS4	40	FCS2-1808C-ARL4	FCS1-1805C-AZU4	47	FCS2-1808C-AZU4
FCS1-1805C-BRU4	78	FCS2-1808C-BRU4	FCS1-1805C-BRS4	78	FCS2-1808C-BRL4	FCS1-1805C-BZU4	47	FCS2-1808C-BZU4
HCS1-1805N-ARU4	33	HCS2-1808N-ARU4						
HCS1-1805N-BRU4	34	HCS2-1808N-BRU4						
HCS1-1805P-ARU4	35	HCS2-1808P-ARU4						
HCS1-1805P-BRU4	36	HCS2-1808P-BRU4						
			Please see Page 18 for details and specifications of DC 2-Wire models on this page.					
Approx.94 g	Approx.91 g		Approx.74 g	Approx.70 g		Approx.94 g	Approx.91 g	

DC METAL FACE INDUCTIVE PROXIMITY SWITCH

M 30		M 30		M 30	
●	○	●	○	●	○
10 mm	15 mm	10 mm	15 mm	10 mm	15 mm
stainless steel		stainless steel		stainless steel	
●		●		●	

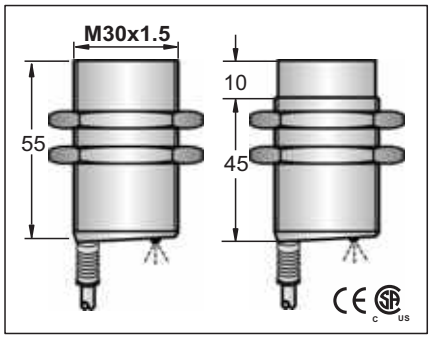

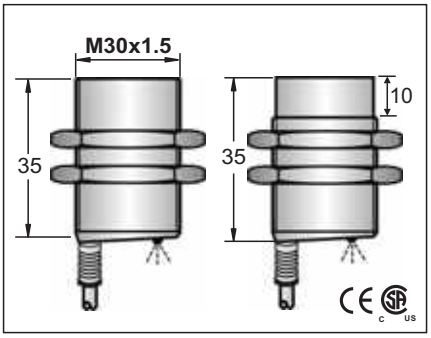

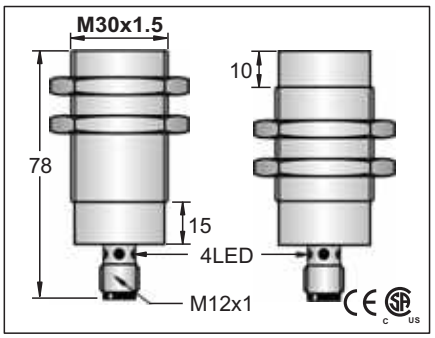

M 30		M 30		M 30	
10-30VDC or 10-55VDC		10-30VDC or 10-55VDC		10-30VDC or 10-55VDC	
<10%		<10%		<10%	
<10mA	<20mA	<10mA	<20mA	<10mA	<20mA
200mA		200mA		200mA	
<0.01mA		<0.01mA		<0.01mA	
-		-		-	
-		-		-	
<1.5V or <1.0V or <2.0V		<1.5V or <1.0V or <2.0V		<1.5V or <1.0V or <2.0V	
300HZ	150HZ	2KHZ	1KHZ	2KHZ	1KHZ
0.5ms/0.5ms	1ms/1ms	0.5ms/0.5ms	1ms/1ms	0.5ms/0.5ms	1ms/1ms
<15%(Sr)		<15%(Sr)		<15%(Sr)	
<1.0%(Sr)		<1.0%(Sr)		<1.0%(Sr)	
IP67		IP67		IP67	
-25°C – +70℃		-25°C – +70℃		-25°C – +70℃	
<10%(Sr)		<10%(Sr)		<10%(Sr)	
YES		YES		YES	
220mA		220mA		220mA	
<10ms		<10ms		<10ms	
RFI>3V/m / EFT>1KV / ESD>4KV (contact)		RFI>3V/m / EFT>1KV / ESD>4KV (contact)		RFI>3V/m / EFT>1KV / ESD>4KV (contact)	
IEC 60947-5-2,Part 7.4.1 / IEC 60947-5-2,Part 7.4.2		IEC 60947-5-2,Part 7.4.1 / IEC 60947-5-2,Part 7.4.2		IEC 60947-5-2,Part 7.4.1 / IEC 60947-5-2,Part 7.4.2	
Stainless steel		Stainless steel		Stainless steel	

FCS1-3010N-A3U2	1	FCS2-3015N-A3U2	FCS1-3010N-A3S2	1	FCS2-3015N-A3S2	FCS1-3010N-ARU4	33	FCS2-3015N-ARU4
FCS1-3010N-B3U2	2	FCS2-3015N-B3U2	FCS1-3010N-B3S2	2	FCS2-3015N-B3S2	FCS1-3010N-BRU4	34	FCS2-3015N-BRU4
FCS1-3010P-A3U2	3	FCS2-3015P-A3U2	FCS1-3010P-A3S2	3	FCS2-3015P-A3S2	FCS1-3010P-ARU4	35	FCS2-3015P-ARU4
FCS1-3010P-B3U2	4	FCS2-3015P-B3U2	FCS1-3010P-B3S2	4	FCS2-3015P-B3S2	FCS1-3010P-BRU4	36	FCS2-3015P-BRU4
FCS1-3010P-S4U2	6	FCS2-3015P-S4U2						
FCS1-3010N-S4U2	5	FCS2-3015N-S4U2						
FCS1-3010C-A2U2	7	FCS2-3015C-A2U2				FCS1-3010C-ARU4	40	FCS2-3015C-ARU4
FCS1-3010C-B2U2	8	FCS2-3015C-B2U2				FCS1-3010C-BRU4	78	FCS2-3015C-BRU4
HCS1-3010N-A3U2	1	HCS2-3015N-A3U2						
HCS1-3010N-B3U2	2	HCS2-3015N-B3U2						
HCS1-3010P-A3U2	3	HCS2-3015P-A3U2						
HCS1-3010P-B3U2	4	HCS2-3015P-B3U2						

Please see Page 18 for details and specifications of DC 2-Wire models on this page.

5.8∅3x0.5		5.8∅3x0.5			
Approx.217 g	Approx.207 g	Approx.146 g	Approx.138 g	Approx.187 g	Approx.179 g

DC METAL FACE INDUCTIVE PROXIMITY SWITCH

M 30		M 30	
●	○	●	○
10 mm	15 mm	10 mm	15 mm
Stainless steel		Stainless steel	
●		●	

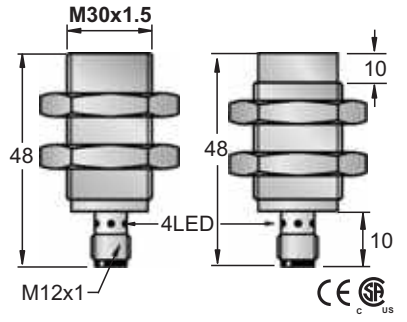

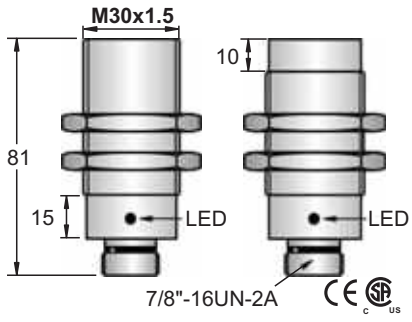

10-30VDC or 10-55VDC			10-30VDC or 10-55VDC		
<10%			<10%		
<10mA	<20mA		<10mA	<20mA	
200mA			200mA		
<0.01mA			<0.01mA		
-			-		
-			-		
<1.5V or <1.0V or <2.0V			<1.5V or <1.0V or <2.0V		
2KHZ	1KHZ		2KHZ	1KHZ	
0.5ms/0.5ms	1ms/1ms		0.5ms/0.5ms	1ms/1ms	
<15%(Sr)			<15%(Sr)		
<1.0%(Sr)			<1.0%(Sr)		
IP67			IP67		
-25°C – +70℃			-25°C – +70℃		
<10%(Sr)			<10%(Sr)		
YES			YES		
220mA			220mA		
<10ms			<10ms		
RFI>3V/m / EFT>1KV / ESD>4KV (contact)			RFI>3V/m / EFT>1KV / ESD>4KV (contact)		
IEC 60947-5-2,Part 7.4.1 / IEC 60947-5-2,Part 7.4.2			IEC 60947-5-2,Part 7.4.1 / IEC 60947-5-2,Part 7.4.2		
Stainless steel			Stainless steel		
FCS1-3010N-ARS4	33	FCS2-3015N-ARS4	FCS1-3010N-AZU4	41	FCS2-3015N-AZU4
FCS1-3010N-BRS4	34	FCS2-3015N-BRS4	FCS1-3010N-BZU4	42	FCS2-3015N-BZU4
FCS1-3010P-ARS4	35	FCS2-3015P-ARS4	FCS1-3010P-AZU4	43	FCS2-3015P-AZU4
FCS1-3010P-BRS4	36	FCS2-3015P-BRS4	FCS1-3010P-BZU4	44	FCS2-3015P-BZU4
			Please see Page 18 for details and specifications of DC 2-Wire models on this page.		
Approx.200 g		Approx.200 g	Approx.179 g		Approx.187 g

DC METAL FACE EXTENDED SENSING DISTANCE PROXIMITY SWITCH

M8			M8			M8		
●	○		●	○		●	○	
2 mm	4 mm		2 mm	4 mm		2 mm	4 mm	
Stainless steel			Stainless steel			Stainless steel		
●			●			●		
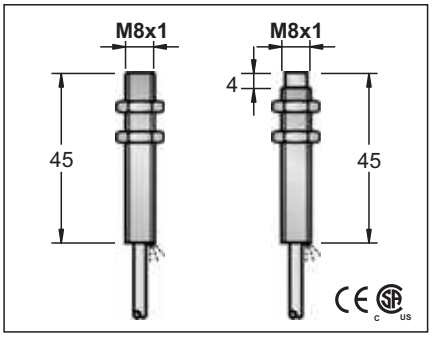			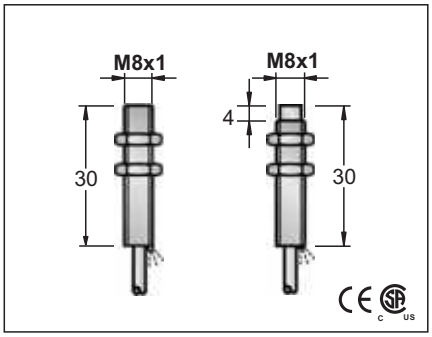			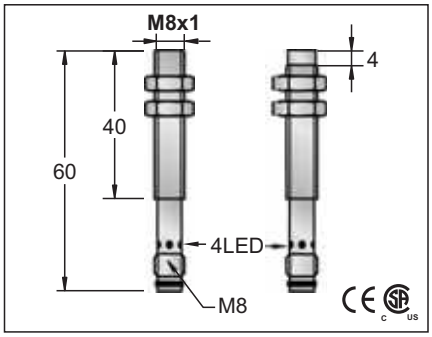		
10-30VDC or 10-55VDC			10-30VDC or 10-55VDC			10-30VDC or 10-55VDC		
<10%			<10%			<10%		
<10mA			<10mA			<10mA		
200mA			200mA			200mA		
<0.01mA			<0.01mA			<0.01mA		
-			-			-		
-			-			-		
<1.5V			<1.5V			<1.5V		
2KHZ	1KHZ		2KHZ	1KHZ		2KHZ	1KHZ	
0.1ms/0.1ms	0.2ms/0.2ms		0.1ms/0.1ms	0.2ms/0.2ms		0.1ms/0.1ms	0.2ms/0.2ms	
<15%(Sr)			<15%(Sr)			<15%(Sr)		
<1.0%(Sr)			<1.0%(Sr)			<1.0%(Sr)		
IP67			IP67			IP67		
-25°C – +70°C			-25°C – +70°C			-25°C – +70°C		
<10%(Sr)			<10%(Sr)			<10%(Sr)		
YES			YES			YES		
220mA			220mA			220mA		
<10ms			<10ms			<10ms		
RFI>3V/m / EFT>1KV / ESD>4KV (contact)			RFI>3V/m / EFT>1KV / ESD>4KV (contact)			RFI>3V/m / EFT>1KV / ESD>4KV (contact)		
IEC 60947-5-2,Part 7.4.1 / IEC 60947-5-2,Part 7.4.2			IEC 60947-5-2,Part 7.4.1 / IEC 60947-5-2,Part 7.4.2			IEC 60947-5-2,Part 7.4.1 / IEC 60947-5-2,Part 7.4.2		
Stainless steel			Stainless steel			Stainless steel		
ECS1-0802N-A3U2			ECS1-0802N-A3S2	1		ECS1-0802N-ACU3	29	
ECS1-0802N-B3U2			ECS1-0802N-B3S2	2		ECS1-0802N-BCU3	29	
ECS1-0802P-A3U2			ECS1-0802P-A3S2	3		ECS1-0802P-ACU3	30	
ECS1-0802P-B3U2			ECS1-0802P-B3S2	4		ECS1-0802P-BCU3	30	
			Please see Page 18 for details and specifications of DC 2-Wire models on this page.					
3φ3x0.15			3φ3x0.15					
Approx.40 g	Approx.40 g		Approx.35 g	Approx.35 g		Approx.15 g	Approx.15 g	

DC METAL FACE EXTENDED SENSING DISTANCE PROXIMITY SWITCH

M8		
●	○	
2 mm	4 mm	
Stainless steel		
●		

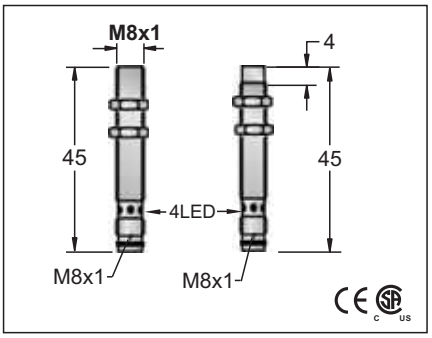

10-30VDC or 10-55VDC	
<10%	
<10mA	
200mA	
<0.01mA	
-	
-	
<1.5V	
2KHZ	1KHZ
0.1ms/0.1ms	0.2ms/0.2ms
<15%(Sr)	
<1.0%(Sr)	
IP67	
-25°C – +70℃	
<10%(Sr)	
YES	
220mA	
<10ms	
RFI>3V/m / EFT>1KV / ESD>4KV (contact)	
IEC 60947-5-2,Part 7.4.1 / IEC 60947-5-2,Part 7.4.2	
Stainless steel	

ECS1-0802N-ACS3	29	
ECS1-0802N-BCS3	29	
ECS1-0802P-ACS3	30	
ECS1-0802P-BCS3	30	

Approx.12 g	Approx.12 g

M8		
●	○	
2 mm	4 mm	
Stainless steel		
●		

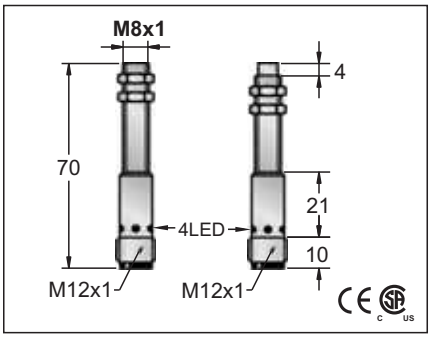

10-30VDC or 10-55VDC	
<10%	
<10mA	
200mA	
<0.01mA	
-	
-	
<1.5V	
2KHZ	1KHZ
0.1ms/0.1ms	0.2ms/0.2ms
<15%(Sr)	
<1.0%(Sr)	
IP67	
-25°C – +70℃	
<10%(Sr)	
YES	
220mA	
<10ms	
RFI>3V/m / EFT>1KV / ESD>4KV (contact)	
IEC 60947-5-2,Part 7.4.1 / IEC 60947-5-2,Part 7.4.2	
Stainless steel	

ECS1-0802N-ARU4	33	
ECS1-0802N-BRU4	34	
ECS1-0802P-ARU4	35	
ECS1-0802P-BRU4	36	

Please see Page 18 for details and specifications of DC 2-Wire models on this page.

Approx.22 g	Approx.22 g

M8		
●	○	
2 mm	4 mm	
Stainless steel		
●		

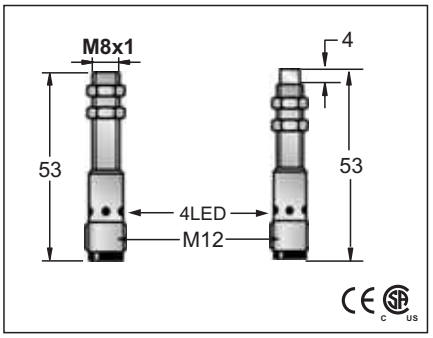

10-30VDC or 10-55VDC	
<10%	
<10mA	
200mA	
<0.01mA	
-	
-	
<1.5V	
2KHZ	1KHZ
0.1ms/0.1ms	0.2ms/0.2ms
<15%(Sr)	
<1.0%(Sr)	
IP67	
-25°C – +70℃	
<10%(Sr)	
YES	
220mA	
<10ms	
RFI>3V/m / EFT>1KV / ESD>4KV (contact)	
IEC 60947-5-2,Part 7.4.1 / IEC 60947-5-2,Part 7.4.2	
Stainless steel	

ECS1-0802N-ARS4	33	
ECS1-0802N-BRS4	34	
ECS1-0802P-ARS4	35	
ECS1-0802P-BRS4	36	

Approx.17 g	Approx.17 g

DC METAL FACE EXTENDED SENSING DISTANCE PROXIMITY SWITCH

M12		M12		M12	
●	○	●	○	●	○
4 mm	8 mm	4 mm	8 mm	4 mm	8 mm
Stainless steel		Stainless steel		Stainless steel	
●		●		●	

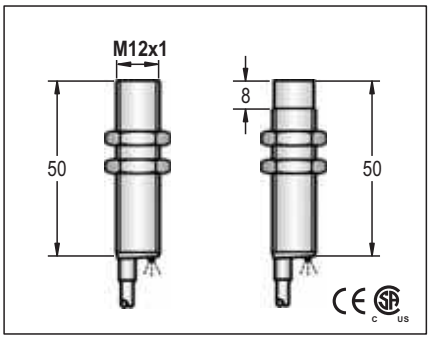

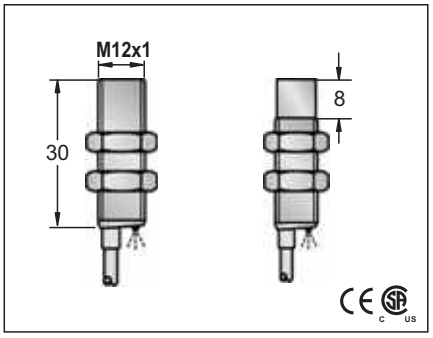

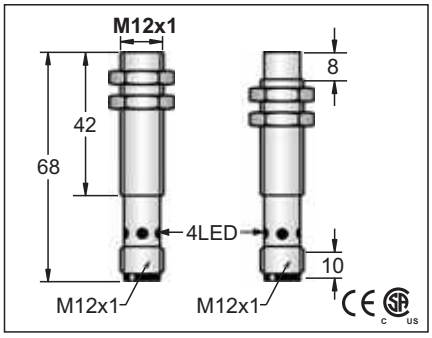

10-30VDC or 10-55VDC		10-30VDC or 10-55VDC		10-30VDC or 10-55VDC	
<10%		<10%		<10%	
<10mA		<10mA		<10mA	
200mA		200mA		200mA	
<0.01mA		<0.01mA		<0.01mA	
-		-		-	
-		-		-	
<1.5V		<1.5V		<1.5V	
1KHZ	500HZ	1KHZ	500HZ	1KHZ	500HZ
0.2ms/0.2ms	0.5ms/0.5ms	0.2ms/0.2ms	0.5ms/0.5ms	0.2ms/0.2ms	0.5ms/0.5ms
<15%(Sr)		<15%(Sr)		<15%(Sr)	
<1.0%(Sr)		<1.0%(Sr)		<1.0%(Sr)	
IP67		IP67		IP67	
-25°C – +70°C		-25°C – +70°C		-25°C – +70°C	
<10%(Sr)		<10%(Sr)		<10%(Sr)	
YES		YES		YES	
220mA		220mA		220mA	
<10ms		<10ms		<10ms	
RFI>3V/m / EFT>1KV / ESD>4KV (contact)		RFI>3V/m / EFT>1KV / ESD>4KV (contact)		RFI>3V/m / EFT>1KV / ESD>4KV (contact)	
IEC 60947-5-2,Part 7.4.1 / IEC 60947-5-2,Part 7.4.2		IEC 60947-5-2,Part 7.4.1 / IEC 60947-5-2,Part 7.4.2		IEC 60947-5-2,Part 7.4.1 / IEC 60947-5-2,Part 7.4.2	
Stainless steel		Stainless steel		Stainless steel	

ECS1-1204N-A3U2	1		ECS1-1204N-A3S2	1		ECS1-1204N-ARU4	33	
ECS1-1204N-B3U2	2		ECS1-1204N-B3S2	2		ECS1-1204N-BRU4	34	
ECS1-1204P-A3U2	3		ECS1-1204P-A3S2	3		ECS1-1204P-ARU4	35	
ECS1-1204P-B3U2	4		ECS1-1204P-B3S2	4		ECS1-1204P-BRU4	36	

Please see Page 18 for details and specifications of DC 2-Wire models on this page.

4φ3x0.15		4φ3x0.15			
Approx.67 g	Approx.65 g	Approx.62 g	Approx.60 g	Approx.31 g	Approx.30 g

DC METAL FACE EXTENDED SENSING DISTANCE PROXIMITY SWITCH

M12		M18		M18	
●	○	●	○	●	○
4 mm	8 mm	8 mm	16 mm	8 mm	16 mm
Stainless steel		Stainless steel		Stainless steel	
●		●		●	

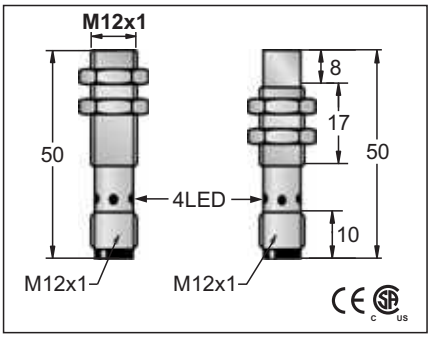

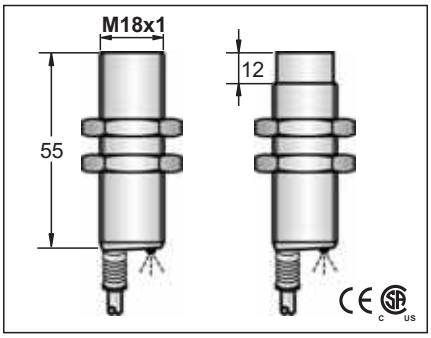

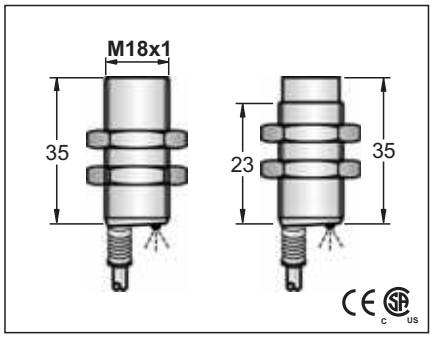

M12		M18		M18	
10-30VDC or 10-55VDC		10-30VDC or 10-55VDC		10-30VDC or 10-55VDC	
<10%		<10%		<10%	
<10mA		<10mA		<10mA	
200mA		200mA		200mA	
<0.01mA		<0.01mA		<0.01mA	
-		-		-	
-		-		-	
<1.5V		<1.5V		<1.5V	
1KHZ	500HZ	500HZ	150HZ	500HZ	150HZ
0.2ms/0.2ms	0.5ms/0.5ms	0.5ms/0.5ms	1ms/1ms	0.5ms/0.5ms	1ms/1ms
<15%(Sr)		<15%(Sr)		<15%(Sr)	
<1.0%(Sr)		<1.0%(Sr)		<1.0%(Sr)	
IP67		IP67		IP67	
-25°C – +70℃		-25°C – +70℃		-25°C – +70℃	
<10%(Sr)		<10%(Sr)		<10%(Sr)	
YES		YES		YES	
220mA		220mA		220mA	
<10ms		<10ms		<10ms	
RFI>3V/m / EFT>1KV / ESD>4KV (contact)		RFI>3V/m / EFT>1KV / ESD>4KV (contact)		RFI>3V/m / EFT>1KV / ESD>4KV (contact)	
IEC 60947-5-2,Part 7.4.1 / IEC 60947-5-2,Part 7.4.2		IEC 60947-5-2,Part 7.4.1 / IEC 60947-5-2,Part 7.4.2		IEC 60947-5-2,Part 7.4.1 / IEC 60947-5-2,Part 7.4.2	
Stainless steel		Stainless steel		Stainless steel	

ECS1-1204N-ARS4	33		ECS1-1808N-A3U2	1		ECS1-1808N-A3S2	1	
ECS1-1204N-BRS4	34		ECS1-1808N-B3U2	2		ECS1-1808N-B3S2	2	
ECS1-1204P-ARS4	35		ECS1-1808P-A3U2	3		ECS1-1808P-A3S2	3	
ECS1-1204P-BRS4	36		ECS1-1808P-B3U2	4		ECS1-1808P-B3S2	4	

Please see Page 18 for details and specifications of DC 2-Wire models on this page.

		5.0 ϕ44x0.1		5.0 ϕ44x0.1	
Approx.25 g	Approx.23 g	Approx.153 g	Approx.144 g	Approx.132 g	Approx.134 g

DC METAL FACE EXTENDED SENSING DISTANCE PROXIMITY SWITCH

M 18		M 18		M 18	
●	○	●	○	●	○
8 mm	16 mm	8 mm	16 mm	8 mm	16 mm
stainless steel		stainless steel		stainless steel	
●		●		●	

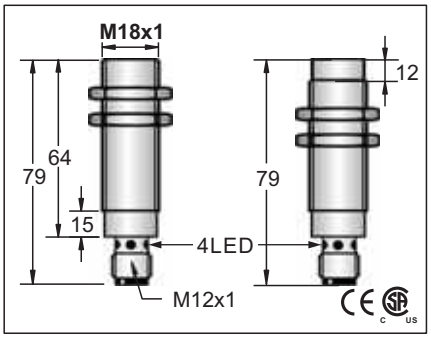

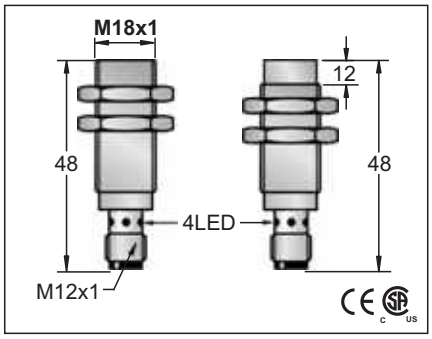

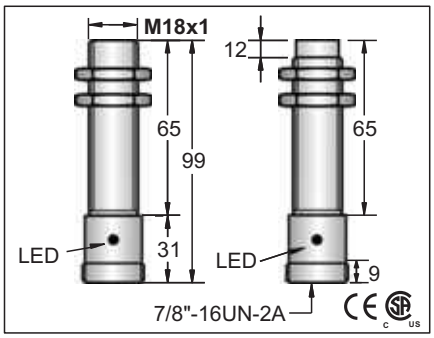

10-30VDC or 10-55VDC		10-30VDC or 10-55VDC		10-30VDC or 10-55VDC	
<10%		<10%		<10%	
<10mA		<10mA		<10mA	
200mA		200mA		200mA	
<0.01mA		<0.01mA		<0.01mA	
-		-		-	
-		-		-	
<1.5V		<1.5V		<1.5V	
500HZ	150HZ	500HZ	150HZ	500HZ	150HZ
0.5ms/0.5ms	1ms/1ms	0.5ms/0.5ms	1ms/1ms	0.5ms/0.5ms	1ms/1ms
<15%(Sr)		<15%(Sr)		<15%(Sr)	
<1.0%(Sr)		<1.0%(Sr)		<1.0%(Sr)	
IP67		IP67		IP67	
-25°C – +70℃		-25°C – +70℃		-25°C – +70℃	
<10%(Sr)		<10%(Sr)		<10%(Sr)	
YES		YES		YES	
220mA		220mA		220mA	
<10ms		<10ms		<10ms	
RFI>3V/m / EFT>1KV / ESD>4KV (contact)		RFI>3V/m / EFT>1KV / ESD>4KV (contact)		RFI>3V/m / EFT>1KV / ESD>4KV (contact)	
IEC 60947-5-2,Part 7.4.1 / IEC 60947-5-2,Part 7.4.2		IEC 60947-5-2,Part 7.4.1 / IEC 60947-5-2,Part 7.4.2		IEC 60947-5-2,Part 7.4.1 / IEC 60947-5-2,Part 7.4.2	
Stainless steel		Stainless steel		Stainless steel	

ECS1-1808N-ARU4	33		ECS1-1808N-ARS4	33				
ECS1-1808N-BRU4	34		ECS1-1808N-BRS4	34				
ECS1-1808P-ARU4	35		ECS1-1808P-ARS4	35				
ECS1-1808P-BRU4	36		ECS1-1808P-BRS4	36				

Please see Page 18 for details and specifications of DC 2-Wire models on this page.

Approx.94 g	Approx.91 g	Approx.50 g	Approx.50 g	Approx.94 g	Approx.91 g

DC METAL FACE EXTENDED SENSING DISTANCE PROXIMITY SWITCH

M 30			M 30			M 30		
●	○		●	○		●	○	
16 mm	25 mm		16 mm	25 mm		16 mm	25 mm	
stainless steel			stainless steel			stainless steel		
●			●			●		

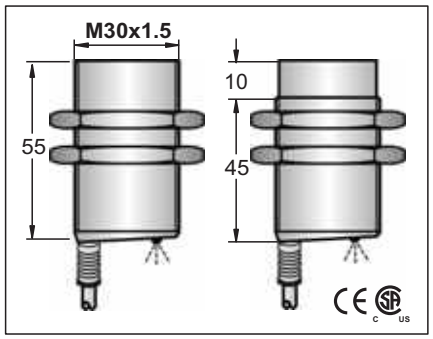

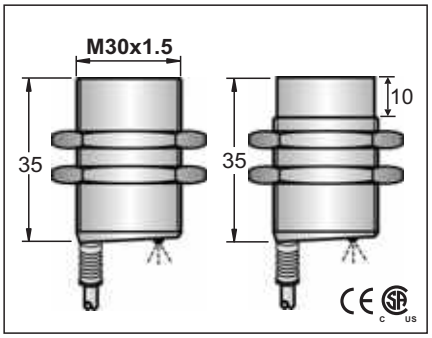

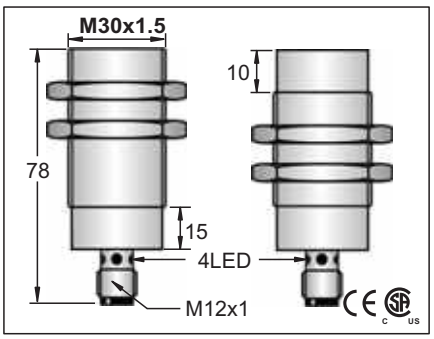

M 30			M 30			M 30		
10-30VDC or 10-55VDC			10-30VDC or 10-55VDC			10-30VDC or 10-55VDC		
<10%			<10%			<10%		
<10mA			<10mA			<10mA		
200mA			200mA			200mA		
<0.01mA			<0.01mA			<0.01mA		
-			-			-		
-			-			-		
<1.5V			<1.5V			<1.5V		
150HZ	100HZ		150HZ	100HZ		150HZ	100HZ	
1ms/1ms	1ms/1ms		1ms/1ms	1ms/1ms		1ms/1ms	1ms/1ms	
<15%(Sr)			<15%(Sr)			<15%(Sr)		
<1.0%(Sr)			<1.0%(Sr)			<1.0%(Sr)		
IP67			IP67			IP67		
-25°C – +70°C			-25°C – +70°C			-25°C – +70°C		
<10%(Sr)			<10%(Sr)			<10%(Sr)		
YES			YES			YES		
220mA			220mA			220mA		
<10ms			<10ms			<10ms		
RFI>3V/m / EFT>1KV / ESD>4KV (contact)			RFI>3V/m / EFT>1KV / ESD>4KV (contact)			RFI>3V/m / EFT>1KV / ESD>4KV (contact)		
IEC 60947-5-2,Part 7.4.1 / IEC 60947-5-2,Part 7.4.2			IEC 60947-5-2,Part 7.4.1 / IEC 60947-5-2,Part 7.4.2			IEC 60947-5-2,Part 7.4.1 / IEC 60947-5-2,Part 7.4.2		
Stainless steel			Stainless steel			Stainless steel		
						ECS1-3016N-ARU4	33	
						ECS1-3016N-BRU4	34	
						ECS1-3016P-ARU4	35	
						ECS1-3016P-BRU4	36	
			Please see Page 18 for details and specifications of DC 2-Wire models on this page.					
5.8⌀3x0.5			5.8⌀3x0.5					
Approx.217 g	Approx.207 g		Approx.22 g	Approx.22 g		Approx.187 g	Approx.179 g	

DC METAL FACE LONG SENSING DISTANCE PROXIMITY SWITCH

M 8		M 8		M 8	
●	○	●	○	●	○
3 mm	6 mm	3 mm	6 mm	3 mm	6 mm
Stainless steel		Stainless steel		Stainless steel	
●		●		●	

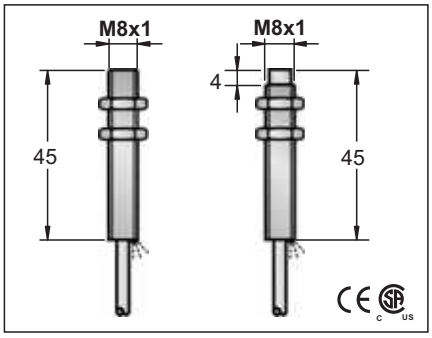

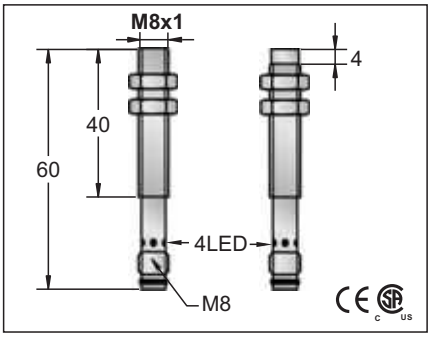

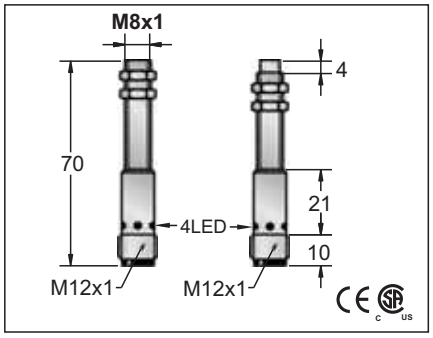

10-30VDC or 10-55VDC		
<10%		
<10mA		
200mA		
<0.01mA		
-		
-		
<1.5V		
500HZ		
0.1ms/0.1ms		
<15%(Sr)		
<1.0%(Sr)		
IP67		
-25 °C - +70°C		
<10%(Sr)		
YES		
220mA		
<10ms		
RFI>3V/m / EFT>1KV / ESD>4KV (contact)		
IEC 60947-5-2,Part 7.4.1 / IEC 60947-5-2,Part 7.4.2		
Stainless steel		
LCS1-0803N-A3U2	1	LCS2-0806N-A3U2
LCS1-0803N-B3U2	2	LCS2-0806N-B3U2
LCS1-0803P-A3U2	3	LCS2-0806P-A3U2
LCS1-0803P-B3U2	4	LCS2-0806P-B3U2
3 ϕ 3x0.15		
Approx.33 g	Approx.32 g	

10-30VDC or 10-55VDC		
<10%		
<10mA		
200mA		
<0.01mA		
-		
-		
<1.5V		
500HZ		
0.1ms/0.1ms		
<15%(Sr)		
<1.0%(Sr)		
IP67		
-25 °C - +70°C		
<10%(Sr)		
YES		
220mA		
<10ms		
RFI>3V/m / EFT>1KV / ESD>4KV (contact)		
IEC 60947-5-2,Part 7.4.1 / IEC 60947-5-2,Part 7.4.2		
Stainless steel		
LCS1-0803N-ACU3	29	LCS2-0806N-ACU3
LCS1-0803N-BCU3	29	LCS2-0806N-BCU3
LCS1-0803P-ACU3	30	LCS2-0806P-ACU3
LCS1-0803P-BCU3	30	LCS2-0806P-BCU3
Approx.28 g	Approx.26 g	

10-30VDC or 10-55VDC		
<10%		
<10mA		
200mA		
<0.01mA		
-		
-		
<1.5V		
500HZ		
0.1ms/0.1ms		
<15%(Sr)		
<1.0%(Sr)		
IP67		
-25 °C - +70°C		
<10%(Sr)		
YES		
220mA		
<10ms		
RFI>3V/m / EFT>1KV / ESD>4KV (contact)		
IEC 60947-5-2,Part 7.4.1 / IEC 60947-5-2,Part 7.4.2		
Stainless steel		
LCS1-0803N-ARU4	33	LCS2-0806N-ARU4
LCS1-0803N-BRU4	34	LCS2-0806N-BRU4
LCS1-0803P-ARU4	35	LCS2-0806P-ARU4
LCS1-0803P-BRU4		LCS2-0806P-BRU4
Approx.33 g	Approx.32 g	

DC METAL FACE LONG SENSING DISTANCE PROXIMITY SWITCH

M12		M12		M12	
●	○	●	○	●	○
6 mm	10 mm	6 mm	10 mm	6 mm	10 mm
Stainless steel		Stainless steel		Stainless steel	
●		●		●	

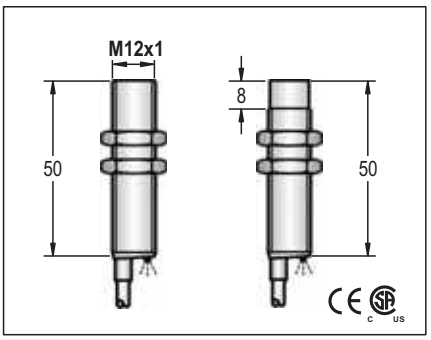

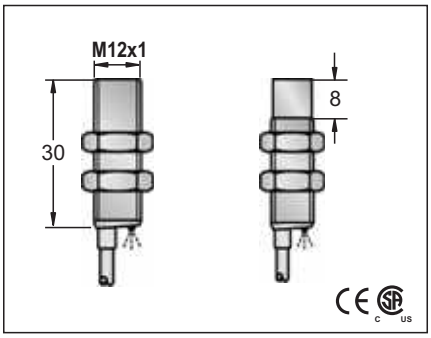

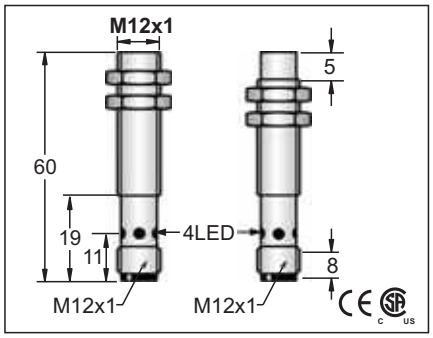

10-30VDC		
<10%		
<10mA		
200mA		
<0.01mA		
-		
-		
<1.5V		
1KHZ	500HZ	
0.1ms/0.1ms	0.2ms/0.2ms	
<15%(Sr)		
<1.0%(Sr)		
IP67		
-25°C – +70℃		
<10%(Sr)		
YES		
220mA		
<10ms		
RFI>3V/m / EFT>1KV / ESD>4KV (contact)		
IEC 60947-5-2,Part 7.4.1 / IEC 60947-5-2,Part 7.4.2		
Stainless steel		
LCS1-1206N-A3U2	1	LCS2-1210N-A3U2
LCS1-1206N-B3U2	2	LCS2-1210N-B3U2
LCS1-1206P-A3U2	3	LCS2-1210P-A3U2
LCS1-1206P-B3U2	4	LCS2-1210P-B3U2
4 ϕ 3x0.15		
Approx.67 g	Approx.65 g	

10-30VDC		
<10%		
<10mA		
200mA		
<0.01mA		
-		
-		
<1.5V		
1KHZ	500HZ	
0.1ms/0.1ms	0.2ms/0.2ms	
<15%(Sr)		
<1.0%(Sr)		
IP67		
-25°C – +70℃		
<10%(Sr)		
YES		
220mA		
<10ms		
RFI>3V/m / EFT>1KV / ESD>4KV (contact)		
IEC 60947-5-2,Part 7.4.1 / IEC 60947-5-2,Part 7.4.2		
Stainless steel		
4 ϕ 3x0.15		
Approx.62 g	Approx.60 g	

Please see Page 18 for details and specifications of DC 2-Wire models on this page.

10-30VDC		
<10%		
<10mA		
200mA		
<0.01mA		
-		
-		
<1.5V		
1KHZ	500HZ	
0.1ms/0.1ms	0.2ms/0.2ms	
<15%(Sr)		
<1.0%(Sr)		
IP67		
-25°C – +70℃		
<10%(Sr)		
YES		
220mA		
<10ms		
RFI>3V/m / EFT>1KV / ESD>4KV (contact)		
IEC 60947-5-2,Part 7.4.1 / IEC 60947-5-2,Part 7.4.2		
Stainless steel		
LCS1-1206N-ARU4	33	LCS2-1210N-ARU4
LCS1-1206N-BRU4	34	LCS2-1210N-BRU4
LCS1-1206P-ARU4	35	LCS2-1210P-ARU4
LCS1-1206P-BRU4	36	LCS2-1210P-BRU4
Approx.31 g	Approx.30 g	

DC METAL FACE LONG SENSING DISTANCE PROXIMITY SWITCH

M12		M18		M18	
●	○	●	○	●	○
12 mm	20 mm	12 mm	20 mm	12 mm	20 mm
Stainless steel		Stainless steel		Stainless steel	
●		●		●	

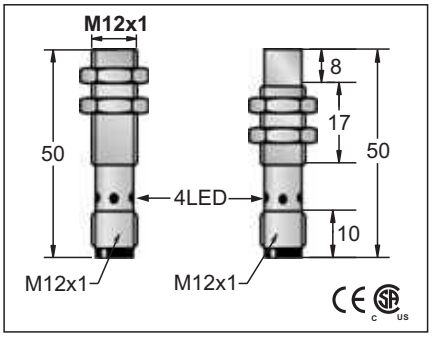

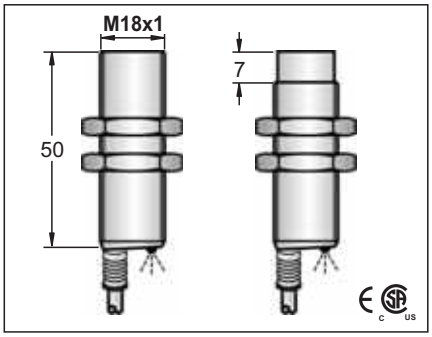

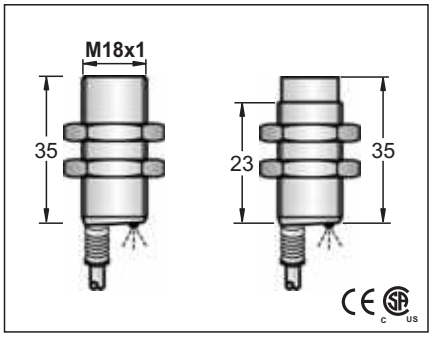

10-30VDC		10-30VDC		10-30VDC	
<10%		<10%		<10%	
<10mA		<10mA		<10mA	
200mA		200mA		200mA	
<0.01mA		<0.01mA		<0.01mA	
-		-		-	
-		-		-	
<1.5V		<1.5V		<1.5V	
1KHZ	500HZ	300HZ	100HZ	300HZ	100HZ
0.1ms/0.1ms	0.2ms/0.2ms	0.5ms/0.5ms	1ms/1ms	0.5ms/0.5ms	1ms/1ms
<15%(Sr)		<15%(Sr)		<15%(Sr)	
<1.0%(Sr)		<1.0%(Sr)		<1.0%(Sr)	
IP67		IP67		IP67	
-25°C－+70℃		-25°C－+70℃		-25°C－+70℃	
<10%(Sr)		<10%(Sr)		<10%(Sr)	
YES		YES		YES	
220mA		220mA		220mA	
<10ms		<10ms		<10ms	
RFI>3V/m / EFT>1KV / ESD>4KV (contact)		RFI>3V/m / EFT>1KV / ESD>4KV (contact)		RFI>3V/m / EFT>1KV / ESD>4KV (contact)	
IEC 60947-5-2,Part 7.4.1 / IEC 60947-5-2,Part 7.4.2		IEC 60947-5-2,Part 7.4.1 / IEC 60947-5-2,Part 7.4.2		IEC 60947-5-2,Part 7.4.1 / IEC 60947-5-2,Part 7.4.2	
Stainless steel		Stainless steel		Stainless steel	

LCS1-1206N-ARS4	33	LCS1-1210N-ARS4
LCS1-1206N-BRS4	34	LCS1-1210N-BRS4
LCS1-1206P-ARS4	35	LCS1-1210P-ARS4
LCS1-1206P-BRS4	36	LCS1-1210P-BRS4

Please see Page 18 for details and specifications of DC 2-Wire models on this page.

		5.0 ϕ44x0.1		5.0 ϕ44x0.1	
Approx.25 g	Approx.23 g	Approx.110 g	Approx.114 g	Approx.132 g	Approx.134 g

DC METAL FACE LONG SENSING DISTANCE PROXIMITY SWITCH

M 18		M 18		M 18	
●	○	●	○	●	○
12 mm	20 mm	12 mm	20 mm	12 mm	20 mm
stainless steel		stainless steel		stainless steel	
●		●		●	

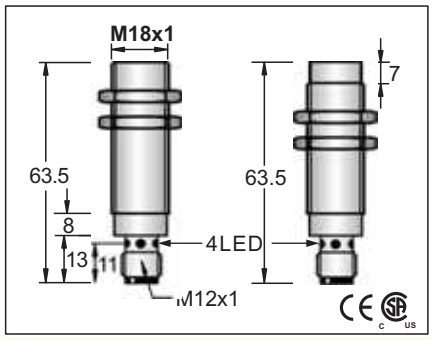

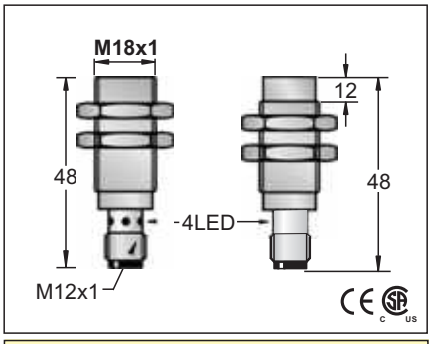

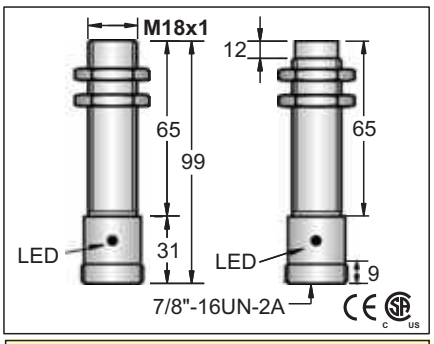

10-30VDC			10-30VDC			10-30VDC	
<10%			<10%			<10%	
<10mA			<10mA			<10mA	
200mA			200mA			200mA	
<0.01mA			<0.01mA			<0.01mA	
-			-			-	
-			-			-	
<1.5V			<1.5V			<1.5V	
300HZ	100HZ		300HZ	100HZ		300HZ	100HZ
0.5ms/0.5ms	1ms/1ms		0.5ms/0.5ms	1ms/1ms		0.5ms/0.5ms	1ms/1ms
<15%(Sr)			<15%(Sr)			<15%(Sr)	
<1.0%(Sr)			<1.0%(Sr)			<1.0%(Sr)	
IP67			IP67			IP67	
-25°C – +70°C			-25°C – +70°C			-25°C – +70°C	
<10%(Sr)			<10%(Sr)			<10%(Sr)	
YES			YES			YES	
220mA			220mA			220mA	
<10ms			<10ms			<10ms	
RFI>3V/m / EFT>1KV / ESD>4KV (contact)			RFI>3V/m / EFT>1KV / ESD>4KV (contact)			RFI>3V/m / EFT>1KV / ESD>4KV (contact)	
IEC 60947-5-2,Part 7.4.1 / IEC 60947-5-2,Part 7.4.2			IEC 60947-5-2,Part 7.4.1 / IEC 60947-5-2,Part 7.4.2			IEC 60947-5-2,Part 7.4.1 / IEC 60947-5-2,Part 7.4.2	
Stainless steel			Stainless steel			Stainless steel	
LCS1-1812N-ARU4	33	LCS2-1820N-ARU4					
LCS1-1812N-BRU4	34	LCS2-1820N-BRU4					
LCS1-1812P-ARU4	35	LCS2-1820P-ARU4					
LCS1-1812P-BRU4	36	LCS2-1820P-BRU4					
			Please see Page 18 for details and specifications of DC 2-Wire models on this page.				
Approx.94 g		Approx.91 g	Approx.50 g		Approx.50 g	Approx.94 g	Approx.91 g

DC METAL FACE LONG SENSING DISTANCE PROXIMITY SWITCH

M 30		M 30		M 30	
●	○	●	○	●	○
20 mm	40 mm	20 mm	40 mm	20 mm	40 mm
stainless steel		stainless steel		stainless steel	
●		●		●	

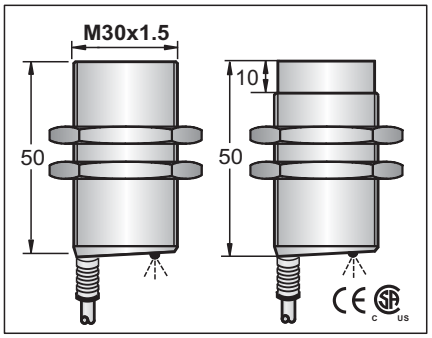

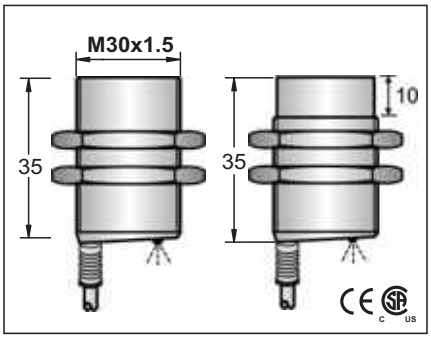

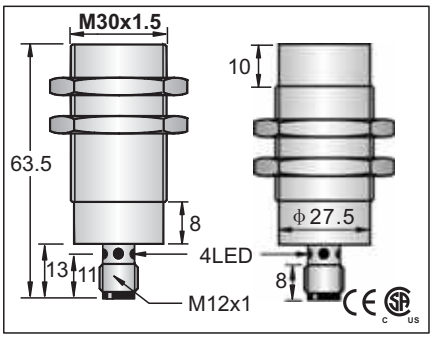

10-30VDC		10-30VDC		10-30VDC	
<10%		<10%		<10%	
<10mA		<10mA		<10mA	
200mA		200mA		200mA	
<0.01mA		<0.01mA		<0.01mA	
-		-		-	
-		-		-	
<1.5V		<1.5V		<1.5V	
300HZ	100HZ	300HZ	100HZ	300HZ	100HZ
0.5ms/0.5ms	1ms/1ms	0.5ms/0.5ms	1ms/1ms	0.5ms/0.5ms	1ms/1ms
<15%(Sr)		<15%(Sr)		<15%(Sr)	
<1.0%(Sr)		<1.0%(Sr)		<1.0%(Sr)	
IP67		IP67		IP67	
-25°C－+70℃		-25°C－+70℃		-25°C－+70℃	
<10%(Sr)		<10%(Sr)		<10%(Sr)	
YES		YES		YES	
220mA		220mA		220mA	
<10ms		<10ms		<10ms	
RFI>3V/m / EFT>1KV / ESD>4KV (contact)		RFI>3V/m / EFT>1KV / ESD>4KV (contact)		RFI>3V/m / EFT>1KV / ESD>4KV (contact)	
IEC 60947-5-2,Part 7.4.1 / IEC 60947-5-2,Part 7.4.2		IEC 60947-5-2,Part 7.4.1 / IEC 60947-5-2,Part 7.4.2		IEC 60947-5-2,Part 7.4.1 / IEC 60947-5-2,Part 7.4.2	
Stainless steel		Stainless steel		Stainless steel	

LCS1-3020N-A3U2	1	LCS2-3040N-A3U2				LCS1-3020N-ARU4	33	LCS2-3040N-ARU4
LCS1-3020N-B3U2	2	LCS2-3040N-B3U2				LCS1-3020N-BRU4	34	LCS2-3040N-BRU4
LCS1-3020P-A3U2	3	LCS2-3040P-A3U2				LCS1-3020P-ARU4	35	LCS2-3040P-ARU4
LCS1-3020P-B3U2	4	LCS2-3040P-B3U2				LCS1-3020P-BRU4	36	LCS2-3040P-BRU4

Please see Page 18 for details and specifications of DC 2-Wire models on this page.

5.8ϕ3x0.5		5.8ϕ3x0.5			
Approx.231 g	Approx.241 g	Approx.180 g	Approx.182 g	Approx.147 g	Approx.170 g

AC METAL FACE INDUCTIVE PROXIMITY SWITCH

Diameter	M 12		M 12	
● Shielded ○ non-Shielded	●	○	●	○
Switching Distance Sn mm	2 mm	4 mm	2 mm	4 mm
Housing Material	Stainless steel		Stainless steel	
● With LED ○ Without LED	●		●	
Dimensions (unit: mm)	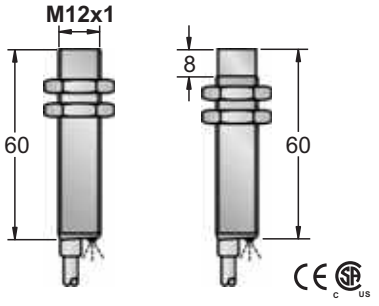		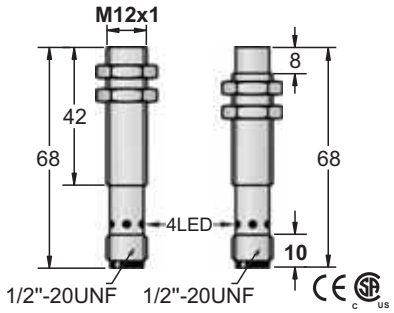	
Operating Voltage	20-250VAC		20-250VAC	
Ripple	-		-	
No Load Current	<1.8mA		<1.8mA	
Max. Load Current	400mA		400mA	
Leakge Current	<1.8mA		<1.8mA	
Surge Current	5A(20ms)		5A(20ms)	
Min. Load Current	5mA		5mA	
Voltage Drop	<8VAC AT 400mA		<8VAC AT 400mA	
Switching Frequency	25HZ		25HZ	
Response Time	10ms/10ms		10ms/10ms	
Switching Hysteresis	<15%(Sr)		<15%(Sr)	
Repeat Accuracy	<1.0%(Sr)		<1.0%(Sr)	
Protection Category	IP67		IP67	
Operating Temperature	-25°C - +70°C		-25°C - +70°C	
Temperature Drift	<10%(Sr)		<10%(Sr)	
Short Circuit Protection	NO		NO	
Overload Trip Point	–		–	
Time Delay Before Availability	–		–	
EMC	RFI>3V/m / EFT>1KV / ESD>4KV (contact)		RFI>3V/m / EFT>1KV / ESD>4KV (contact)	
Shock / Vibration	IEC 60947-5-2,Part 7.4.1 / IEC 60947-5-2,Part 7.4.2		IEC 60947-5-2,Part 7.4.1 / IEC 60947-5-2,Part 7.4.2	
Material Active Face	Stainless steel		Stainless steel	
AC 2 wire 20-250V N.O.	FCS1-1202A-A3L2	11	FCS2-1204A-A3L2	FCS1-1202A-AUL3	56	FCS2-1204A-AUL3
AC 2 wire 20-250V N.C.	FCS1-1202A-B3L2	12	FCS2-1204A-B3L2	FCS1-1202A-BUL3	56	FCS2-1204A-BUL3
AC 2 wire 20-250V N.O. or N.C. Changeable						
AC/DC 2 wire 20-250V N.O.						
AC/DC 2 wire 20-250V N.C.						
AC/DC 2 wire 20-250V N.O. or N.C. Changeable						
Remark	Please see Page 18 for details and specifications of DC 2-Wire models on this page.					
Cable 2M (PVC)	4φ3x0.15					
Weight	Approx.67 g		Approx.65 g	Approx.62 g		Approx.60 g

AC METAL FACE INDUCTIVE PROXIMITY SWITCH

M 18			M 18			M 18		
●	○		●	○		●	○	
5 mm	8 mm		5 mm	8 mm		5 mm	8 mm	
Stainless steel			stainless steel			stainless steel		
●			●			●		
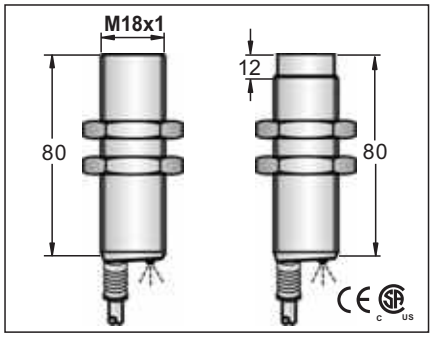			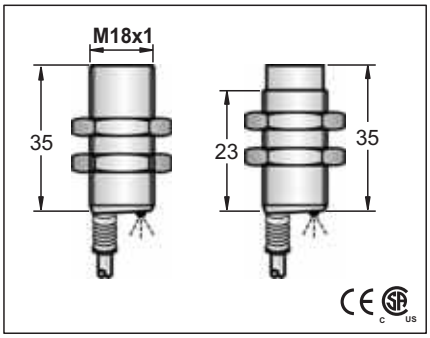			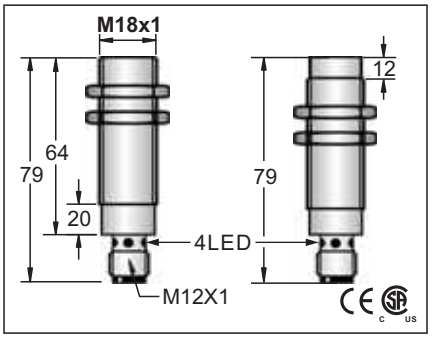		
20-250VAC			20-250VAC			20-250VAC		
-			-			-		
<1.8mA			<1.8mA			<1.8mA		
400mA			400mA			400mA		
<1.8mA			<1.8mA			<1.8mA		
5A(20ms)			5A(20ms)			5A(20ms)		
5mA			5mA			5mA		
<8VAC AT 400mA			<8VAC AT 400mA			<8VAC AT 400mA		
25HZ			<25HZ			<25HZ		
10ms/10ms			10ms/10ms			10ms/10ms		
<15%(Sr)			<15%(Sr)			<15%(Sr)		
<1.0%(Sr)			<1.0%(Sr)			<1.0%(Sr)		
IP67			IP67			IP67		
-25°C - +70°C			-25°C - +70°C			-25°C - +70°C		
<10%(Sr)			<10%(Sr)			<10%(Sr)		
NO			NO			NO		
–			-			-		
–			-			-		
RFI>3V/m / EFT>1KV / ESD>4KV (contact)			RFI>3V/m / EFT>1KV / ESD>4KV (contact)			RFI>3V/m / EFT>1KV / ESD>4KV (contact)		
IEC 60947-5-2,Part 7.4.1 / IEC 60947-5-2,Part 7.4.2			IEC 60947-5-2,Part 7.4.1 / IEC 60947-5-2,Part 7.4.2			IEC 60947-5-2,Part 7.4.1 / IEC 60947-5-2,Part 7.4.2		
Stainless steel			Stainless steel			Stainless steel		
FCS1-1805A-A3L2	11	FCS2-1808A-A3L2	FCS1-1805A-A3S2	11	FCS2-1808A-A3S2	FCS1-1805A-AUL3	56	FCS2-1808A-AUL3
FCS1-1805A-B3L2	12	FCS2-1808A-B3L2	FCS1-1805A-B3S2	12	FCS2-1808A-B3S2	FCS1-1805A-BUL3	56	FCS2-1808A-BUL3
5.0 ϕ 44x0.1			5.0 ϕ 44x0.1					
Approx.45 g		Approx.42 g	Approx.156 g		Approx.146 g	Approx.69 g		Approx.68 g

AC METAL FACE INDUCTIVE PROXIMITY SWITCH (Teflon Coating)

M 18		
●	○	
5 mm	8 mm	
Stainless steel		
●		
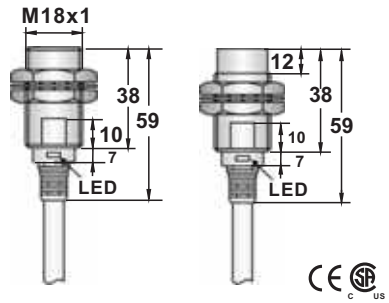		
20-250VAC		
-		
<1.8mA		
400mA		
<1.8mA		
5A(20ms)		
5mA		
<8VAC AT 400MA		
<25HZ		
10ms/10ms		
<15%(Sr)		
<1.0%(Sr)		
IP67		
-25°C - +70°C		
<10%(Sr)		
NO		
-		
160MT		
RFI>10V/m / EFT>1KV / ESD>8KV (contact)		
IEC 60947-5-2,Part 7.4.1 / IEC 60947-5-2,Part 7.4.2		
Stainless steel		
FCS1-1805A-A3S2-W	11	FCS2-1808A-A3S2-W
FCS1-1805A-B3S2-W	12	FCS2-1808A-B3S2-W
5.0 ϕ 44x0.1		
Approx.132 g	Approx.134 g	

M18		
●	○	
5 mm	8 mm	
Stainless steel		
●		
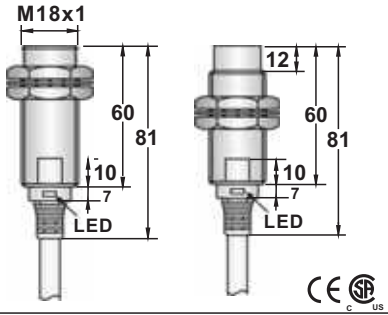		
20-250VAC		
-		
<1.8mA		
400mA		
<1.8mA		
5A(20ms)		
5mA		
<8VAC AT 400MA		
<25HZ		
10ms/10ms		
<15%(Sr)		
<1.0%(Sr)		
IP67		
-25°C - +70°C		
<10%(Sr)		
NO		
-		
160MT		
RFI>10V/m / EFT>1KV / ESD>8KV (contact)		
IEC 60947-5-2,Part 7.4.1 / IEC 60947-5-2,Part 7.4.2		
Stainless steel		
FCS1-1805A-A3L2-W	11	FCS2-1808A-A3L2-W
FCS1-1805A-B3L2-W	12	FCS2-1808A-B3L2-W
5.0 ϕ 44x0.1		
Approx.153 g	Approx.144 g	

M 18		
●	○	
5 mm	8 mm	
Stainless steel		
●		
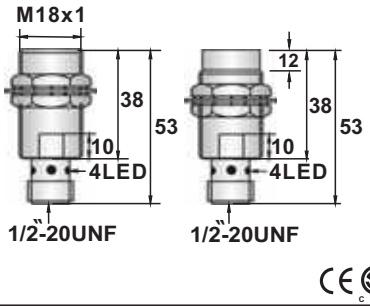		
20-250VAC		
-		
<1.8mA		
400mA		
<1.8mA		
5A(20ms)		
5mA		
<8VAC AT 200MA		
<25HZ		
10ms/10ms		
<15%(Sr)		
<1.0%(Sr)		
IP67		
-25°C - +70°C		
<10%(Sr)		
NO		
-		
160MT		
RFI>10V/m / EFT>1KV / ESD>8KV (contact)		
IEC 60947-5-2,Part 7.4.1 / IEC 60947-5-2,Part 7.4.2		
Stainless steel		
FCS1-1805A-AUS3-W	56	FCS2-1808A-AUS3-W
FCS1-1805A-BUS3-W	56	FCS2-1808A-BUS3-W
Approx.50 g	Approx.50 g	

AC METAL FACE INDUCTIVE PROXIMITY SWITCH (Teflon Coating)

M 18		M 18	M 18		
●	○		●	●	○
5 mm	8mm		5 mm	5 mm	8 mm
Stainless steel			Stainless steel	Stainless steel	
●			●	●	

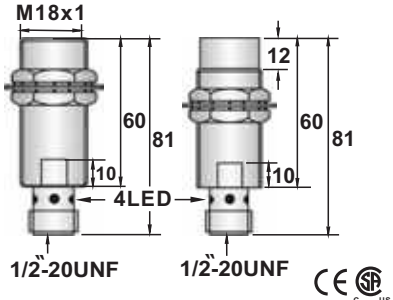

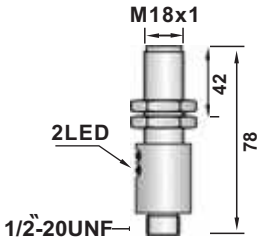

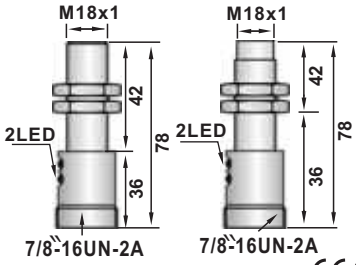

20-250VAC			20-250VAC			20-250VAC		
-			-			-		
<1.8mA			<1.8mA			<1.8mA		
400mA			400mA			400mA		
<1.8mA			<1.8mA			<1.8mA		
5A(20ms)			5A(20ms)			5A(20ms)		
5mA			5mA			5mA		
<8VAC AT 200MA			<8VAC AT 200MA			<8VAC AT 200MA		
<25HZ			<25HZ			<25HZ		
10ms/10ms			10ms/10ms			10ms/10ms		
<15%(Sr)			<15%(Sr)			<15%(Sr)		
<1.0%(Sr)			<1.0%(Sr)			<1.0%(Sr)		
IP67			IP67			IP67		
-25°C - +70°C			-25°C - +70°C			-25°C - +70°C		
<10%(Sr)			<10%(Sr)			<10%(Sr)		
NO			NO			NO		
-			-			-		
160MT			160MT			160MT		
RFI>10V/m / EFT>1KV / ESD>8KV (contact)			RFI>10V/m / EFT>1KV / ESD>8KV (contact)			RFI>10V/m / EFT>1KV / ESD>8KV (contact)		
IEC 60947-5-2,Part 7.4.1 / IEC 60947-5-2,Part 7.4.2			IEC 60947-5-2,Part 7.4.1 / IEC 60947-5-2,Part 7.4.2			IEC 60947-5-2,Part 7.4.1 / IEC 60947-5-2,Part 7.4.2		
Stainless steel			Stainless steel			Stainless steel		
FCS1-1805A-AUL3-W	56	FCS2-1808A-AUL3-W	FCS1-1805A-AUL3/2-W	56				
FCS1-1805A-BUL3-W	56	FCS2-1808A-BUL3-W	FCS1-1805A-BUL3/2-W	56				
Approx.94 g		Approx.91 g	Approx.94 g			Approx.251 g		

AC METAL FACE INDUCTIVE PROXIMITY SWITCH (Teflon Coating)

M 18		M 18		M 18
●	○	●	○	●
5 mm	8 mm	5 mm	8 mm	5 mm
Stainless steel		Stainless steel		Stainless steel
●		●		●
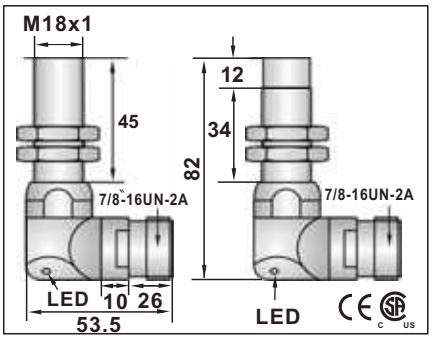		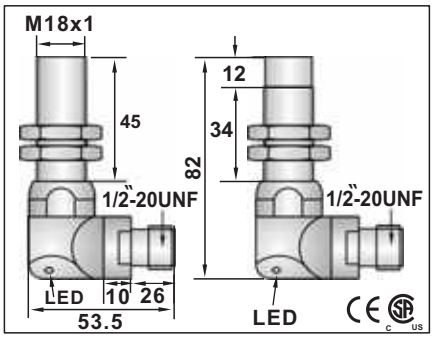		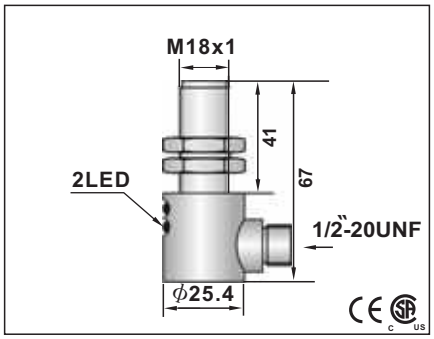
20-250VAC		20-250VAC		20-250VAC
-		-		-
<1.8mA		<1.8mA		<1.8mA
400mA		400mA		400mA
<1.8mA		<1.8mA		<1.8mA
5A(20ms)		5A(20ms)		5A(20ms)
5mA		5mA		5mA
<8VAC AT 400MA		<8VAC AT 400MA		<8VAC AT 200MA
<25HZ		<25HZ		<25HZ
10ms/10ms		10ms/10ms		10ms/10ms
<15%(Sr)		<15%(Sr)		<15%(Sr)
<1.0%(Sr)		<1.0%(Sr)		<1.0%(Sr)
IP67		IP67		IP67
-25°C - +70°C		-25°C - +70°C		-25°C - +70°C
<10%(Sr)		<10%(Sr)		<10%(Sr)
NO		NO		NO
-		-		-
160MT		160MT		160MT
RFI>10V/m / EFT>1KV / ESD>8KV (contact)		RFI>10V/m / EFT>1KV / ESD>8KV (contact)		RFI>10V/m / EFT>1KV / ESD>8KV (contact)
IEC 60947-5-2,Part 7.4.1 / IEC 60947-5-2,Part 7.4.2		IEC 60947-5-2,Part 7.4.1 / IEC 60947-5-2,Part 7.4.2		IEC 60947-5-2,Part 7.4.1 / IEC 60947-5-2,Part 7.4.2
Stainless steel		Stainless steel		Stainless steel
		FCS1-1805A-AUL3Y-W	56	FCS2-1808A-AUL3Y-W
		FCS1-1805A-BUL3Y-W	56	FCS2-1808A-BUL3Y-W

AC METAL FACE EXTENDED SENSING DISTANCE PROXIMITY SWITCH

M 12		M 12		M 18	
●	○	●	○	●	○
4 mm	8 mm	4 mm	8 mm	8 mm	16 mm
Stainless steel		Stainless steel		Stainless steel	
●		●		●	
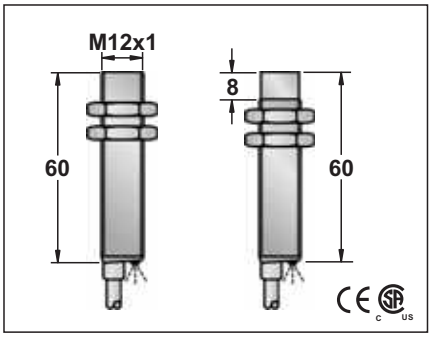		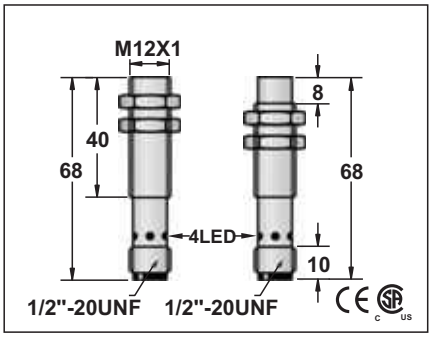		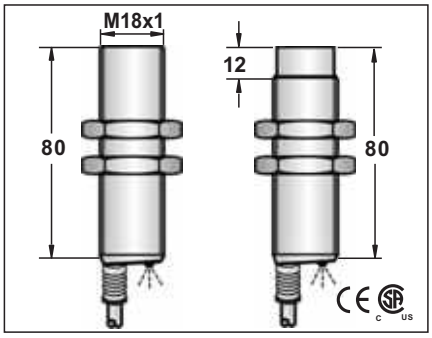	
20-250VAC		20-250VAC		20-250VAC	
-		-		-	
<1.8mA		<1.8mA		<1.8mA	
400mA		400mA		400mA	
<1.8mA		<1.8mA		<1.8mA	
5A(20ms)		5A(20ms)		5A(20ms)	
5mA		5mA		5mA	
<8V AC at 40mA		<8V AC at 40mA		<8V AC at 40mA	
<25HZ		<25HZ		<25HZ	
10ms/10ms		10ms/10ms		10ms/10ms	
<15%(Sr)		<15%(Sr)		<15%(Sr)	
<1.0%(Sr)		<1.0%(Sr)		<1.0%(Sr)	
IP67		IP67		IP67	
-25°C - +70°C		-25°C - +70°C		-25°C - +70°C	
<10%(Sr)		<10%(Sr)		<10%(Sr)	
NO		NO		NO	
–		–		–	
–		–		–	
RFI>3V/m / EFT>1KV / ESD>4KV (contact)		RFI>3V/m / EFT>1KV / ESD>4KV (contact)		RFI>3V/m / EFT>1KV / ESD>4KV (contact)	
IEC 60947-5-2,Part 7.4.1 / IEC 60947-5-2,Part 7.4.2		IEC 60947-5-2,Part 7.4.1 / IEC 60947-5-2,Part 7.4.2		IEC 60947-5-2,Part 7.4.1 / IEC 60947-5-2,Part 7.4.2	
Stainless steel		Stainless steel		Stainless steel	
		ECS1-1204A-AUL3	56	ECS2-1208A-AUL3	ECS1-1808A-A3L2	11	ECS2-1816A-A3L2
		ECS1-1204A-BUL3	56	ECS2-1208A-BUL3	ECS1-1808A-B3L2	12	ECS2-1816A-B3L2
4φ3x0.15				5.0φ44x0.1	
Approx.77 g	Approx.76 g	Approx.31 g	Approx.30 g	Approx.161 g	Approx.160 g

AC METAL FACE EXTENDED SENSING DISTANCE PROXIMITY SWITCH

M 18		M 18		M 18	
●	○	●	○	●	○
8 mm	16 mm	8 mm	16 mm	8 mm	16 mm
stainless steel		stainless steel		stainless steel	
●		●		●	

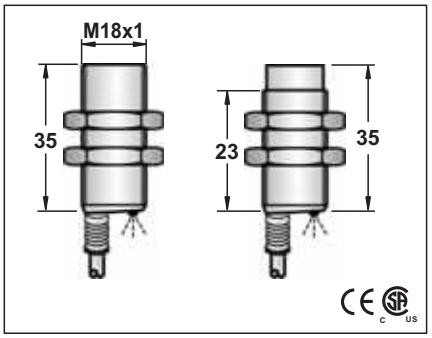

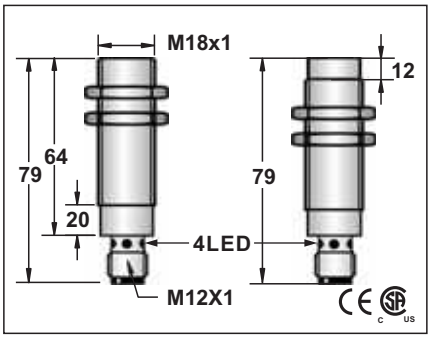

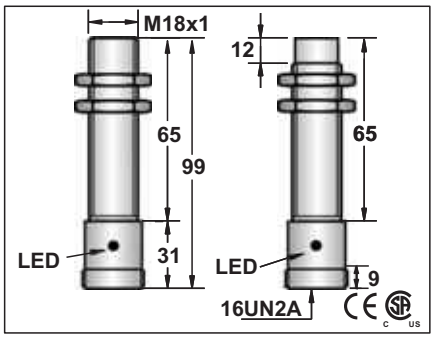

20-250VAC			20-250VAC		
-			-		
<1.8mA			<1.8mA		
400mA			400mA		
<1.8mA			<1.8mA		
5A(20ms)			5A(20ms)		
5mA			5mA		
<8V AC at 40mA			<8V AC at 40mA		
<25Hz			<25Hz		
10ms/10ms			10ms/10ms		
<15%(Sr)			<15%(Sr)		
<1.0%(Sr)			<1.0%(Sr)		
IP67			IP67		
-25 °C - +70 °C			-25 °C - +70 °C		
<10%(Sr)			<10%(Sr)		
NO			NO		
–			–		
–			–		
RFI>3V/m / EFT>1KV / ESD>4KV (contact)			RFI>3V/m / EFT>1KV / ESD>4KV (contact)		
IEC 60947-5-2,Part 7.4.1 / IEC 60947-5-2,Part 7.4.2			IEC 60947-5-2,Part 7.4.1 / IEC 60947-5-2,Part 7.4.2		
Stainless steel			Stainless steel		
ECS1-1808A-A3S2	11	ECS2-1816A-A3S2	ECS1-1808A-AUL3	56	ECS2-1816A-AUL3
ECS1-1808A-B3S2	12	ECS2-1816A-B3S2	ECS1-1808A-BUL3	56	ECS2-1816A-BUL3

AC/DC METAL FACE INDUCTIVE PROXIMITY SWITCH

M 18		M 18		M 18	
●	○	●	○	●	○
5 mm	8 mm	5 mm	8 mm	5 mm	8 mm
stainless steel		stainless steel		stainless steel	
●		●		●	

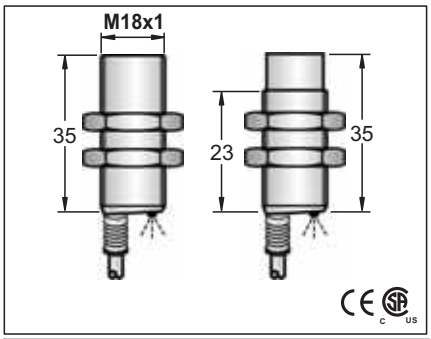

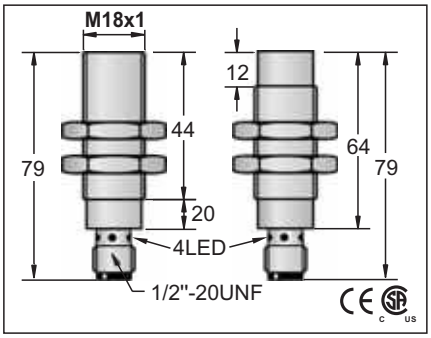

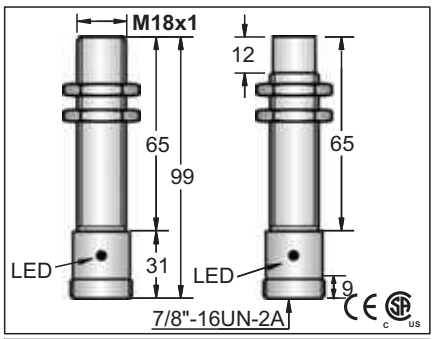

20-250 VAC, 50-60 Hz; 20-250 VDC		
DC RIPPLE <10%		
<2.5mA		
200mA		
<2.5mA		
2.2A for 20ms		
5mA		
<=10 VAC :<=8 VDC		
25HZ AC; 40 Hz DC		
10ms/10ms		
<15%(Sr)		
<1.0% (Sr)		
IP67		
-25°C~+70°C		
<10% (Sr)		
YES		
-		
-		
RFI>3V/m / EFT>1KV / ESD>4KV (contact)		
IEC 60947-5-2,Part 7.4.1 / IEC 60947-5-2,Part 7.4.2		
Stainless steel		

AC/DC METAL FACE INDUCTIVE PROXIMITY SWITCH

M 30		
●	○	
10 mm	15mm	
stainless steel		
●		
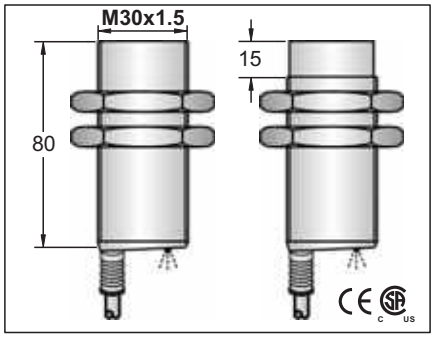		
20-250 VAC, 50-60 Hz; 20-250 VDC		
DC RIPPLE <10%		
<2.5mA		
200mA		
<2.5mA		
2.2A for 20ms		
5mA		
<=10 VAC :<=8 VDC		
25HZ AC; 40 Hz DC		
10ms/10ms		
<15%(Sr)		
<1.0% (Sr)		
IP67		
-25°C - +70°C		
<10% (Sr)		
YES		
-		
-		
RFI>3V/m / EFT>1KV / ESD>4KV (contact)		
IEC 60947-5-2,Part 7.4.1 / IEC 60947-5-2,Part 7.4.2		
Stainless steel		

AC/DC METAL FACE INDUCTIVE PROXIMITY SWITCH

M 30	
●	○
10 mm	15 mm
Stainless steel	
●	

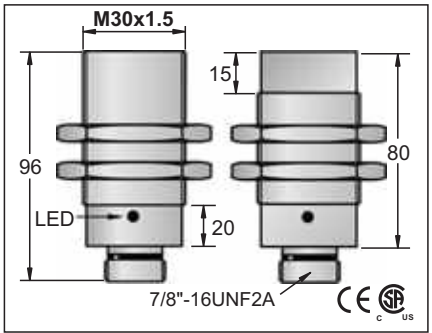

20-250 VAC, 50-60 Hz; 20-250 VDC	
DC RIPPLE <10%	
<2.5mA	
200mA	
<2.5mA	
2.2A for 20ms	
5mA	
<=10 VAC :<=8 VDC	
25HZ AC; 40 Hz DC	
10ms/10ms	
<15%(Sr)	
<1.0% (Sr)	
IP67	
-25°C - +70°C	
<10% (Sr)	
YES	
-	
-	
RFI>3V/m / EFT>1KV / ESD>4KV (contact)	
IEC 60947-5-2,Part 7.4.1 / IEC 60947-5-2,Part 7.4.2	
Stainless steel	

FCS1-3010U-AZL3	65	FCS2-3015U-AZL3
FCS1-3010U-BZL3	65	FCS2-3015U-BZL3

Approx.187 g	Approx.179 g

DC METAL FACE FERROUS/NON-FERROUS SENSING SENSOR

Diameter	M 8	M 8
● Shielded ○ non-Shielded	●	●
Switching Distance Sn mm	1.5 mm	1.5 mm
Housing Material	Stainless steel	Stainless steel
● With LED ○ Without LED	●	●
Dimensions (unit: mm)	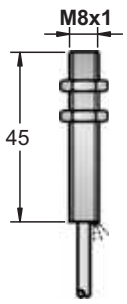	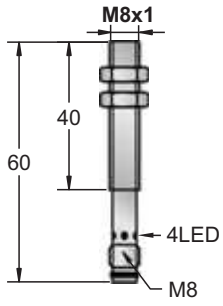
Operating Voltage	10-30VDC	10-30VDC
Ripple	<10%	<10%
No Load Current	⩽ 10mA	⩽ 10mA
Max. Load Current	200mA	200mA
Leakge Current	<0.01mA	<0.01mA
Surge Current	-	-
Min. Load Current	-	-
Voltage Drop	<1.5V	<1.5V
Switching Frequency	0 ...80 HZ	0 ...80 HZ
Response Time	0.1ms/0.1ms	0.1ms/0.1ms
Switching Hysteresis	<15%(Sr)	<15%(Sr)
Repeat Accuracy	<1.0%(Sr)	<1.0%(Sr)
Protection Category	IP67	IP67
Operating Temperature	-25°C - +70°C	-25°C - +70°C
Temperature Drift	<10%(Sr)	<10%(Sr)
Short Circuit Protection	YES	YES
Overload Trip Point	220mA	220mA
Time Delay Before Availability	<10ms	<10ms
EMC	RFI>3V/m / EFT>1KV / ESD>4KV (contact)	RFI>3V/m / EFT>1KV / ESD>4KV (contact)
Shock / Vibration	IEC 60947-5-2,Part 7.4.1 / IEC 60947-5-2,Part 7.4.2	IEC 60947-5-2,Part 7.4.1 / IEC 60947-5-2,Part 7.4.2
Material Active Face	Stainless steel	Stainless steel
DC 3 wire 10-30V NPN N.O. FERROUS ONY SENSING	FCS1-081.5N-A3U2/FE 1	
DC 3 wire 10-30V NPN N.C. FERROUS ONY SENSING	FCS1-081.5N-B3U2/FE 2	
DC 3 wire 10-30V PNP N.O. FERROUS ONY SENSING	FCS1-081.5P-A3U2/FE 3	
DC 3 wire 10-30V PNP N.C. FERROUS ONY SENSING	FCS1-081.5P-B3U2/FE 4	
DC 3 wire 10-30V NPN N.O. NON-FERROUS ONY SENSING		
DC 3 wire 10-30V NPN N.C. NON-FERROUS ONY SENSING		
DC 3 wire 10-30V PNP N.O. NON-FERROUS ONY SENSING		
DC 3 wire 10-30V PNP N.C. NON-FERROUS ONY SENSING		
DC 2 wire 10-60V N.O. FERROUS ONY SENSING		
DC 2 wire 10-60V N.C. FERROUS ONY SENSING		
DC 2 wire 10-60V N.O. NON-FERROUS ONY SENSING		
DC 2 wire 10-60V N.C. NON-FERROUS ONY SENSING		
AC/DC 2 wire 20-250V N.O. FERROUS ONY SENSING		
AC/DC 2 wire 20-250V N.C. FERROUS ONY SENSING		
AC/DC 2 wire 20-250V N.O. NON-FERROUS ONY SENSING		
AC/DC 2 wire 20-250V N.C. NON-FERROUS ONY SENSING		
Remark	xxxx-xxxxx-xxxx/FE → Target material: Ferrous xxxx-xxxxx-xxxx/NFE → Target material: Non-Ferrous	Correction factors
Cable 2M (PVC)	3φ3x0.15	5.0φ44x0.1
Weight	Approx.33g	Approx.32g

Correction factors

Series	Mild steel	Stainless steel	Aluminum	Copper	Brass
FE	1	0.7-0.9	0	0	0
NFE	0	0	1	1.1	0.9

DC METAL FACE FERROUS/NON-FERROUS SENSING SENSOR

M 8	M 12		M 12	
●	●	○	●	○
1.5 mm	2 mm	4 mm	2 mm	4 mm
Stainless steel	stainless steel		stainless steel	
●	●		●	

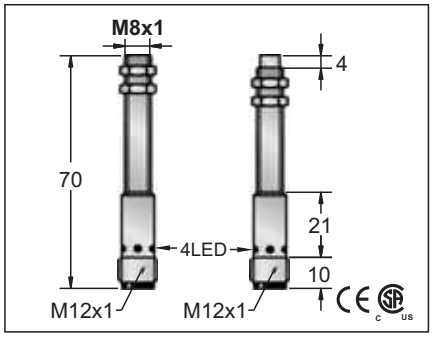

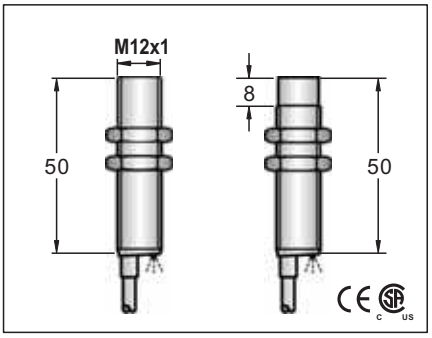

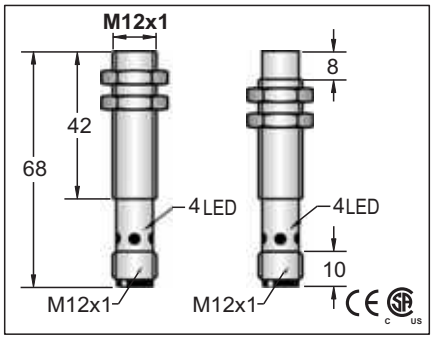

M 8	M 12		M 12	
10-30VDC	10-30VDC		10-30VDC	
<10%	<10%		<10%	
≤ 10mA	<10mA		<10mA	
200mA	200mA		200mA	
<0.01mA	<0.01mA		<0.01mA	
-	-		-	
-	-		-	
<1.5V	<1.5V		<1.5V	
0 ...80 HZ	2KHZ	1KHZ	2KHZ	1KHZ
0.1ms/0.1ms	0.1ms/0.1ms	0.2ms/0.2ms	0.1ms/0.1ms	0.2ms/0.2ms
<15%(Sr)	<15%(Sr)		<15%(Sr)	
<1.0%(Sr)	<1.0%(Sr)		<1.0%(Sr)	
IP67	IP67		IP67	
-25°C - +70°C	-25°C - +70°C		-25°C - +70°C	
<10%(Sr)	<10%(Sr)		<10%(Sr)	
YES	YES		YES	
220mA	220mA		220mA	
<10ms	<10ms		<10ms	
RFI>3V/m / EFT>1KV / ESD>4KV (contact)	RFI>3V/m / EFT>1KV / ESD>4KV (contact)		RFI>3V/m / EFT>1KV / ESD>4KV (contact)	
IEC 60947-5-2,Part 7.4.1 / IEC 60947-5-2,Part 7.4.2	IEC 60947-5-2,Part 7.4.1 / IEC 60947-5-2,Part 7.4.2		IEC 60947-5-2,Part 7.4.1 / IEC 60947-5-2,Part 7.4.2	
Stainless steel	Stainless steel		Stainless steel	

		FCS1-1202N-A3U2/FE	1	FCS2-1204N-A3U2/FE	FCS1-1202N-ARU4/FE	33	FCS2-1204N-ARU4/FE
		FCS1-1202N-B3U2/FE	2	FCS2-1204N-B3U2/FE	FCS1-1202N-BRU4/FE	34	FCS2-1204N-BRU4/FE
		FCS1-1202P-A3U2/FE	3	FCS2-1204P-A3U2/FE	FCS1-1202P-ARU4/FE	35	FCS2-1204P-ARU4/FE
		FCS1-1202P-B3U2/FE	4	FCS2-1204P-B3U2/FE	FCS1-1202P-BRU4/FE	36	FCS2-1204P-BRU4/FE
		FCS1-1202N-A3U2/NFE	1	FCS2-1204N-A3U2/NFE			
		FCS1-1202N-B3U2/NFE	2	FCS2-1204N-B3U2/NFE			
		FCS1-1202P-A3U2/NFE	3	FCS2-1204P-A3U2/NFE			
		FCS1-1202P-B3U2/NFE	4	FCS2-1204P-B3U2/NFE			

xxxx-xxxxx-xxxx/FE → Target material: Ferrous

xxxx-xxxxx-xxxx/NFE → Target material: Non-Ferrous

Correction factors

Series	Mild steel	Stainless steel	Aluminum	Copper	Brass
FE	1	0.7-0.9	0	0	0
NFE	0	0	1	1.1	0.9

	4 Ø 3x0.15	
Approx.33 g	approx.67 g	approx.65 g	approx.31 g	approx.30 g

DC METAL FACE FERROUS/NON-FERROUS SENSING SENSOR

M 18	
●	○
5 mm	8 mm
stainless steel	
●	

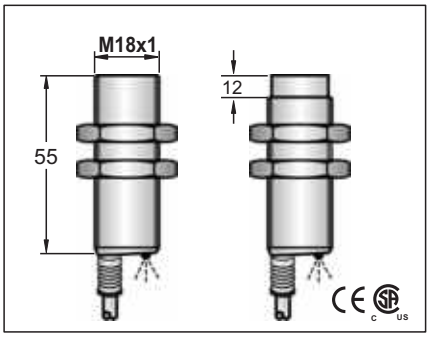

10-30VDC	
<10%	
<10mA	
200mA	
<0.01mA	
-	
-	
<1.5V	
1KHZ	500HZ
0.2ms/0.2ms	0.5ms/0.5ms
<15%(Sr)	
<1.0%(Sr)	
IP67	
-25°C - +70°C	
<10%(Sr)	
YES	
220mA	
<10ms	
RFI>3V/m / EFT>1KV / ESD>4KV (contact)	
IEC 60947-5-2,Part 7.4.1 / IEC 60947-5-2,Part 7.4.2	
Stainless steel	

FCS1-1805N-A3U2/FE	1	FCS2-1808N-A3U2/FE
FCS1-1805N-B3U2/FE	2	FCS2-1808N-B3U2/FE
FCS1-1805P-A3U2/FE	3	FCS2-1808P-A3U2/FE
FCS1-1805P-B3U2/FE	4	FCS2-1808P-B3U2/FE
FCS1-1805N-A3U2/NFE	1	FCS2-1808N-A3U2/NFE
FCS1-1805N-B3U2/NFE	2	FCS2-1808N-B3U2/NFE
FCS1-1805P-A3U2/NFE	3	FCS2-1808P-A3U2/NFE
FCS1-1805P-B3U2/NFE	4	FCS2-1808P-B3U2/NFE

xxxx-xxxxx-xxxx/FE → Target material: Ferrous

xxxx-xxxxx-xxxx/NFE → Target material: Non-Ferrous

5.0 Φ44x0.1	
approx.153 g	approx.144 g

M 18	
●	○
5 mm	8 mm
stainless steel	
●	

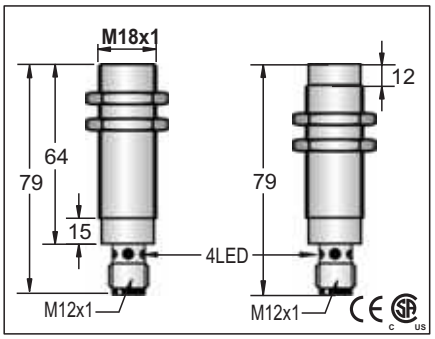

10-30VDC	
<10%	
<10mA	
200mA	
<0.01mA	
-	
-	
<1.5V	
1KHZ	500HZ
0.2ms/0.2ms	0.5ms/0.5ms
<15%(Sr)	
<1.0%(Sr)	
IP67	
-25 °C -+70 °C	
<10%(Sr)	
YES	
220mA	
<10ms	
RFI>3V/m / EFT>1KV / ESD>4KV (contact)	
IEC 60947-5-2,Part 7.4.1 / IEC 60947-5-2,Part 7.4.2	
Stainless steel	

FCS1-1805N-ARU4/FE	33	FCS2-1808N-ARU4/FE
FCS1-1805N-BRU4/FE	34	FCS2-1808N-BRU4/FE
FCS1-1805P-ARU4/FE	35	FCS2-1808P-ARU4/FE
FCS1-1805P-BRU4/FE	36	FCS2-1808P-BRU4/FE
FCS1-1805N-ARU4/NFE	33	FCS2-1808N-ARU4/NFE
FCS1-1805N-BRU4/NFE	34	FCS2-1808N-BRU4/NFE
FCS1-1805P-ARU4/NFE	35	FCS2-1808P-ARU4/NFE
FCS1-1805P-BRU4/NFE	36	FCS2-1808P-BRU4/NFE

Correction factors

Series	Mild steel	Stainless steel	Aluminum	Copper	Brass
FE	1	0.7-0.9	0	0	0
NFE	0	0	1	1.1	0.9

approx.94 g	approx.91 g

M 18	
●	○
5 mm	8 mm
stainless steel	
●	

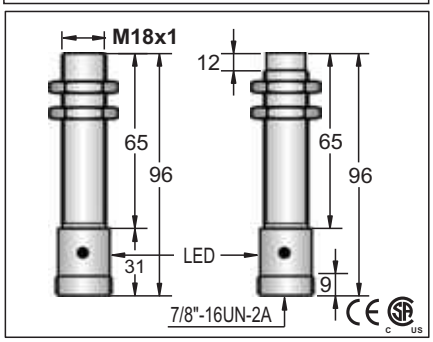

10-30VDC	
<10%	
<10mA	
200mA	
<0.01mA	
-	
-	
<1.5V	
1KHZ	500HZ
0.2ms/0.2ms	0.5ms/0.5ms
<15%(Sr)	
<1.0%(Sr)	
IP67	
-25 °C -+70 °C	
<10%(Sr)	
YES	
220mA	
<10ms	
RFI>3V/m / EFT>1KV / ESD>4KV (contact)	
IEC 60947-5-2,Part 7.4.1 / IEC 60947-5-2,Part 7.4.2	
Stainless steel	

FCS1-1805N-AZU4/NFE	41	FCS2-1808N-AZU4/NFE
FCS1-1805N-BZU4/NFE	42	FCS2-1808N-BZU4/NFE
FCS1-1805P-AZU4/NFE	43	FCS2-1808P-AZU4/NFE
FCS1-1805P-BZU4/NFE	44	FCS2-1808P-BZU4/NFE

approx.94 g	approx.91 g

AC METAL FACE FERROUS/NON-FERROUS SENSING (Teflon Coating)

Diameter	M 18		M18	
● Shielded ○ non-Shielded	●	○	●	○
Switching Distance Sn mm	5 mm	8 mm	5 mm	8 mm
Housing Material	SUS 303 stainless steel		SUS 303 stainless steel	
● With LED ○ Without LED	●		●	
Dimensions (unit: mm)	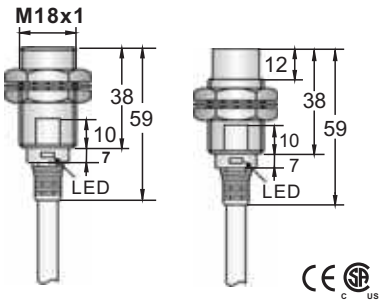		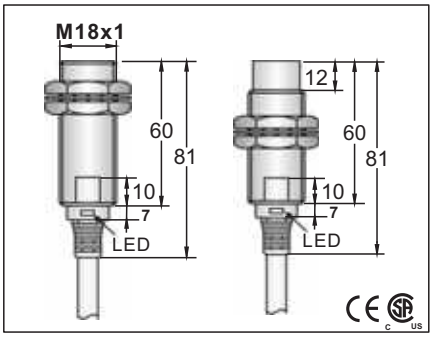	
Operating Voltage	20-250VAC		20-250VAC	
Ripple	-		-	
No Load Current	<1.8mA		<1.8mA	
Max. Load Current	400mA		400mA	
Leakge Current	<1.8mA		<1.8mA	
Surge Current	5A(20ms)		5A(20ms)	
Min. Load Current	5mA		5mA	
Voltage Drop	<8VAC AT 400MA		<8VAC AT 400MA	
Switching Frequency	<25HZ		<25HZ	
Response Time	10ms/10ms		10ms/10ms	
Switching Hysteresis	<15%(Sr)		<15%(Sr)	
Repeat Accuracy	<1.0%(Sr)		<1.0%(Sr)	
Protection Category	IP67		IP67	
Operating Temperature	-25°C - +70°C		-25°C - +70°C	
Temperature Drift	<10%(Sr)		<10%(Sr)	
Short Circuit Protection	NO		NO	
Overload Trip Point	-		-	
Time Delay Before Availability	160MT		160MT	
EMC	RFI>10V/m / EFT>1KV / ESD>8KV (contact)		RFI>10V/m / EFT>1KV / ESD>8KV (contact)	
Shock / Vibration	IEC 60947-5-2,Part 7.4.1 / IEC 60947-5-2,Part 7.4.2		IEC 60947-5-2,Part 7.4.1 / IEC 60947-5-2,Part 7.4.2	
Material Active Face	SUS 303 stainless steel		SUS 303 stainless steel	
DC 3 wire 10-30V NPN N.O. FERROUS ONY SENSING				
DC 3 wire 10-30V NPN N.C. FERROUS ONY SENSING				
DC 3 wire 10-30V PNP N.O. FERROUS ONY SENSING				
DC 3 wire 10-30V PNP N.C. FERROUS ONY SENSING				
DC 3 wire 10-30V NPN N.O. NON-FERROUS ONY SENSING				
DC 3 wire 10-30V NPN N.C. NON-FERROUS ONY SENSING				
DC 3 wire 10-30V PNP N.O. NON-FERROUS ONY SENSING				
DC 3 wire 10-30V PNP N.C. NON-FERROUS ONY SENSING				
AC 2 wire 20-250V N.O. FERROUS ONY SENSING	FCS1-1805A-A3S2/FE-W	11 FCS2-1808A-A3S2/FE-W	FCS1-1805A-A3L2/FE-W	11 FCS2-1808A-A3L2/FE-W
AC 2 wire 20-250V N.C. FERROUS ONY SENSING	FCS1-1805A-B3S2/FE-W	12 FCS2-1808A-B3S2/FE-W	FCS1-1805A-B3L2/FE-W	12 FCS2-1808A-B3L2/FE-W
AC 2 wire 20-250V N.O. NON-FERROUS ONY SENSING	FCS1-1805A-A3S2/NFE-W	11 FCS2-1808A-A3S2/NFE-W	FCS1-1805A-A3L2/NFE-W	11 FCS2-1808A-A3L2/NFE-W
AC 2 wire 20-250V N.C. NON-FERROUS ONY SENSING	FCS1-1805A-B3S2/NFE-W	12 FCS2-1808A-B3S2/NFE-W	FCS1-1805A-B3L2/NFE-W	12 FCS2-1808A-B3L2/NFE-W
AC/DC 2 wire 20-250V N.O. FERROUS ONY SENSING				
AC/DC 2 wire 20-250V N.C. FERROUS ONY SENSING				
AC/DC 2 wire 20-250V N.O. NON-FERROUS ONY SENSING				
AC/DC 2 wire 20-250V N.C. NON-FERROUS ONY SENSING				
Remark	xxxx-xxxxx-xxxx/FE → Target material: Ferrous xxxx-xxxxx-xxxx/NFE → Target material: Non-Ferrous		Correction factors	
Cable 2M (PVC)	5.8Ø3x0.5		5.8Ø3x0.5	
Weight	Approx.132 g	Approx.134 g	Approx.153 g	Approx.144 g

Series	Mild steel	Stainless steel	Aluminum	Copper	Brass
FE	1	0.7-0.9	0	0	0
NFE	0	0	1	1.1	0.9

AC METAL FACE FERROUS/NON-FERROUS SENSING (Teflon Coating)

M 18			M 18			M 18	
●	○		●	○		●	
5 mm	8 mm		5 mm	8mm		5 mm	
SUS 303 stainless steel			SUS 303 stainless steel			SUS 303 stainless steel	
●			●			●	

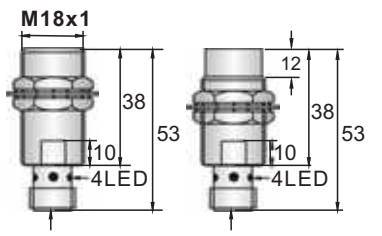

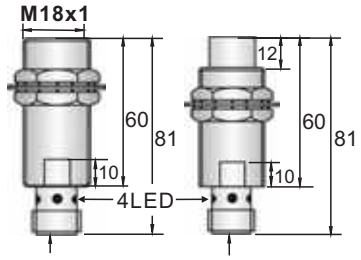

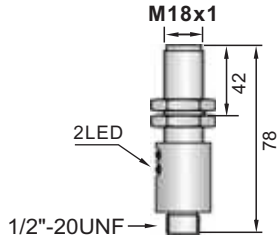

20-250VAC		
-		
<1.8mA		
400mA		
<1.8mA		
5A(20ms)		
5mA		
<8VAC AT 200MA		
<25HZ		
10ms/10ms		
<15%(Sr)		
<1.0%(Sr)		
IP67		
-25°C - +70°C		
<10%(Sr)		
NO		
-		
160MT		
RFI>10V/m / EFT>1KV / ESD>8KV (contact)		
IEC 60947-5-2,Part 7.4.1 / IEC 60947-5-2,Part 7.4.2		
SUS 303 stainless steel		
FCS1-1805A-AUS3/FE-W	56	FCS2-1808A-AUS3/FE-W
FCS1-1805A-BUS3/FE-W	56	FCS2-1808A-BUS3/FE-W
FCS1-1805A-AUS3/NFE-W	56	FCS2-1808A-AUS3/NFE-W
FCS1-1805A-BUS3/NFE-W	56	FCS2-1808A-BUS3/NFE-W
Approx.50 g		Approx.50 g

20-250VAC		
-		
<1.8mA		
400mA		
<1.8mA		
5A(20ms)		
5mA		
<8VAC AT 200MA		
<25HZ		
10ms/10ms		
<15%(Sr)		
<1.0%(Sr)		
IP67		
-25°C - +70°C		
<10%(Sr)		
NO		
-		
160MT		
RFI>10V/m / EFT>1KV / ESD>8KV (contact)		
IEC 60947-5-2,Part 7.4.1 / IEC 60947-5-2,Part 7.4.2		
SUS 303 stainless steel		
FCS1-1805A-AUL3/FE-W	56	FCS2-1808A-AUL3/FE-W
FCS1-1805A-BUL3/FE-W	56	FCS2-1808A-BUL3/FE-W
FCS1-1805A-AUL3/NFE-W	56	FCS2-1808A-AUL3/NFE-W
FCS1-1805A-BUL3/NFE-W	56	FCS2-1808A-BUL3/NFE-W
Approx.94 g		Approx.91 g

xxxx-xxxxx-xxxx/FE → Target material: Ferrous

xxxx-xxxxx-xxxx/NFE → Target material: Non-Ferrous

20-250VAC		
-		
<1.8mA		
400mA		
<1.8mA		
5A(20ms)		
5mA		
<8VAC AT 200MA		
<25HZ		
10ms/10ms		
<15%(Sr)		
<1.0%(Sr)		
IP67		
-25°C - +70°C		
<10%(Sr)		
NO		
-		
160MT		
RFI>10V/m / EFT>1KV / ESD>8KV (contact)		
IEC 60947-5-2,Part 7.4.1 / IEC 60947-5-2,Part 7.4.2		
SUS 303 stainless steel		
FCS1-1805A-AUS3/2/FE-W	56	
FCS1-1805A-BUS3/2/FE-W	56	
FCS1-1805A-AUS3/2/NFE-W	56	
FCS1-1805A-BUS3/2/NFE-W	56	
Approx.94 g		

Correction factors

Series	Mild steel	Stainless steel	Aluminum	Copper	Brass
FE	1	0.7-0.9	0	0	0
NFE	0	0	1	1.1	0.9

AC METAL FACE FERROUS/NON-FERROUS SENSING (Teflon Coating)

M 18	M 18	M 30	
●	●	●	○
5 mm	5 mm	10 mm	15 mm
SUS 303 stainless steel	SUS 303 stainless steel	SUS 303 stainless steel	
●	●	●	

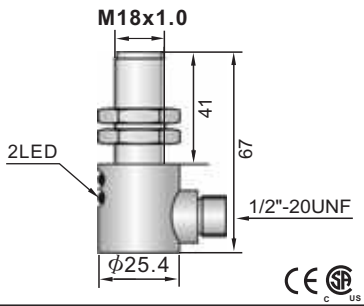

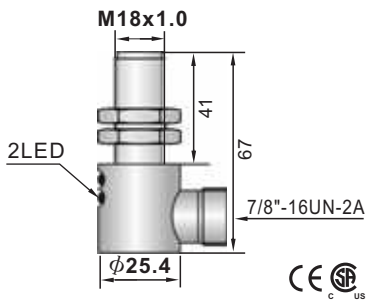

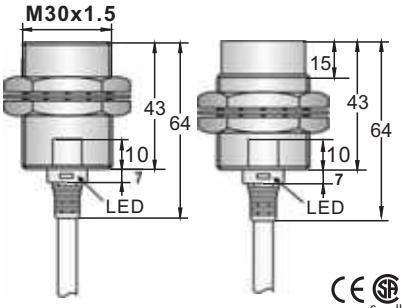

M 18	M 18	M 30
20-250VAC	20-250VAC	20-250VAC
-	-	-
<1.8mA	<1.8mA	<1.8mA
400mA	400mA	400mA
<1.8mA	<1.8mA	<1.8mA
5A(20ms)	5A(20ms)	5A(20ms)
5mA	5mA	5mA
<8VAC AT 200MA	<8VAC AT 200MA	<8VAC at 400MA
<25HZ	<25HZ	<25HZ
10ms/10ms	10ms/10ms	10ms/10ms
<15%(Sr)	<15%(Sr)	<15%(Sr)
<1.0%(Sr)	<1.0%(Sr)	<1.0%(Sr)
IP67	IP67	IP67
-25°C - +70°C	-25°C - +70°C	-25°C - +70°C
<10%(Sr)	<10%(Sr)	<10%(Sr)
NO	NO	NO
-	-	-
160MT	160MT	160MT
RFI>10V/m / EFT>1KV / ESD>8KV (contact)	RFI>10V/m / EFT>1KV / ESD>8KV (contact)	RFI>8V/m / EFT>1KV / ESD>8KV (contact)
IEC 60947-5-2,Part 7.4.1 / IEC 60947-5-2,Part 7.4.2	IEC 60947-5-2,Part 7.4.1 / IEC 60947-5-2,Part 7.4.2	IEC 60947-5-2,Part 7.4.1 / IEC 60947-5-2,Part 7.4.2
SUS 303 stainless steel	SUS 303 stainless steel	SUS 303 stainless steel

FCS1-1805A-AUS3Y/2/FE-W	56
FCS1-1805A-BUS3Y/2/FE-W	56
FCS1-1805A-AUS3Y/2/NFE-W	56
FCS1-1805A-BUS3Y/2/NFE-W	56

xxxx-xxxxx-xxxx/FE → Target material: Ferrous

xxxx-xxxxx-xxxx/NFE → Target material: Non-Ferrous

Correction factors

Series	Mild steel	Stainless steel	Aluminum	Copper	Brass
FE	1	0.7-0.9	0	0	0
NFE	0	0	1	1.1	0.9

		5.8ϕ3x0.5
Approx.251 g	Approx.260 g	Approx.217 g / Approx.207 g

AC/DC METAL FACE FERROUS/NON-FERROUS SENSING (Teflon Coating)

M 30		M 30	
●	○	●	○
10 mm	15 mm	10 mm	15 mm
stainless steel		stainless steel	
●		●	

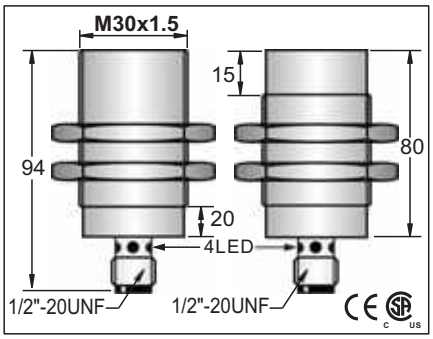

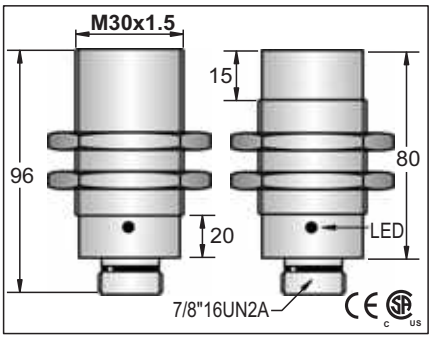

20-250 VAC, 50-60 Hz; 20-250 VDC	20-250 VAC, 50-60 Hz; 20-250 VDC
DC RIPPLE <10%	DC RIPPLE <10%
<2.5mA	<2.5mA
200mA	200mA
<2.5mA	<2.5mA
2.2A for 20ms	2.2A for 20ms
5mA	5mA
<=10 VAC :<=8 VDC	<=10 VAC :<=8 VDC
25HZ AC; 40 Hz DC	25HZ AC; 40 Hz DC
10ms/10ms	10ms/10ms
<15%(Sr)	<15%(Sr)
<1.0% (Sr)	<1.0% (Sr)
IP67	IP67
-25°C - +70°C	-25°C - +70°C
<10% (Sr)	<10% (Sr)
YES	YES
-	-
-	-
RFI>3V/m / EFT>1KV / ESD>4KV (contact)	RFI>3V/m / EFT>1KV / ESD>4KV (contact)
IEC 60947-5-2,Part 7.4.1 / IEC 60947-5-2,Part 7.4.2	IEC 60947-5-2,Part 7.4.1 / IEC 60947-5-2,Part 7.4.2
Stainless steel	Stainless steel

FCS1-3010U-AUL3/FE	56	FCS2-3015U-AUL3/FE	FCS1-3010U-AZL3/FE	65	FCS2-3015U-AZL3/FE
FCS1-3010U-BUL3/FE	56	FCS2-3015U-BUL3/FE	FCS1-3010U-BZL3/FE	65	FCS2-3015U-BZL3/FE
FCS1-3010U-AUL3/NFE	56	FCS2-3015U-AUL3/NFE	FCS1-3010U-AZL3/NFE	65	FCS2-3015U-AZL3/NFE
FCS1-3010U-BUL3/NFE	56	FCS2-3015U-BUL3/NFE	FCS1-3010U-BZL3/NFE	65	FCS2-3015U-BZL3/NFE

xxxx-xxxxx-xxxx/FE → Target material: Ferrous

xxxx-xxxxx-xxxx/NFE → Target material: Non-Ferrous

Correction factors

Series	Mild steel	Stainless steel	Aluminum	Copper	Brass
FE	1	0.7-0.9	0	0	0
NFE	0	0	1	1.1	0.9

approx.147g	approx.137g
approx.187g	approx.179g