INDUCTIVE SENSORS -Weld field immune

● Operating principle

Weld field immune inductive sensors work in the same way as standard inductive sensors. When a metal target approaches the active face of the sensor, energy is drawn from the oscillator causing a decrease of the amplitude.

This loss of amplitude is recognized in the detector circuit and converted in a defined ON or OFF signal at the output.

● Weld field immunity

Weld field immunity is achieved by the use of a special core material and a specially determined oscillator. The limit of the weld field immunity depends on the kind of field (DC or AC), the housing size of the sensor and its location in the field.

Sensors are tested during manufacturing, Under the worst case conditions in an AC field up to an AC field up to 160 meeting The figure opposite shows the characteristic of the magnetic induction depending on the current-carrying conductor. The magnetic induction close to a current-carrying conductor can be calculated approximatively by the formula:

$$B \approx \frac{0.2 \times I\,[A]}{r\,[mm]} \quad [\,MT\,]$$

Explication:

I = Current, carrying the conductor [A]

r = Distance between sensor and current carrying lines(in meters)

B = Magnetic induction [mT]

Some reference values for magnetic induction

I [kA]	Distance [mm]			
	12.5	25	50	100
5	80mT	40mT	20mT	10mT
10	160mT	80mT	40mT	20mT
20	320mT	160mT	80mT	40mT
50	800mT	400mT	200mT	100mT
100	1600mT	800mT	400mT	200mT

Weld field immune

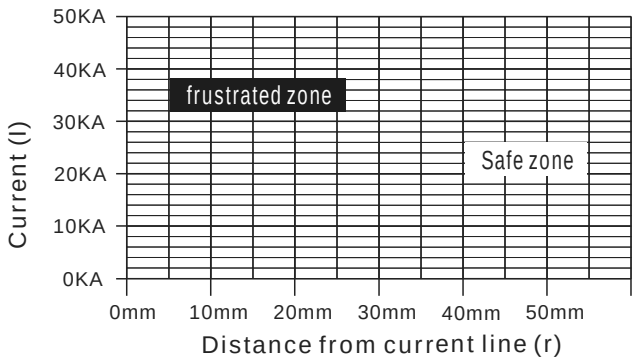

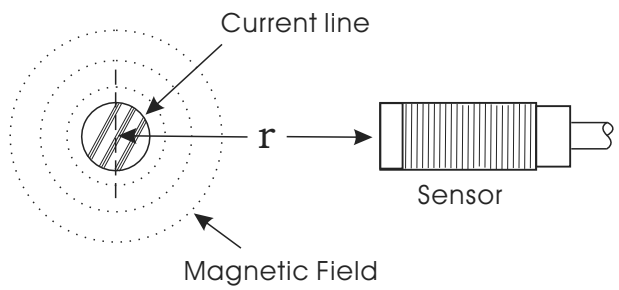

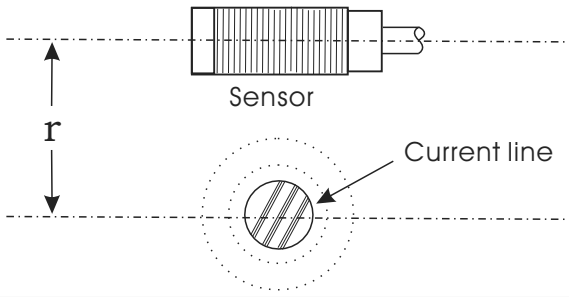

GENERAL INFORMATION

DC INDUCTIVE SENSORS WELD FIELD IMMUNE

M 8		M 8		M 8	
●	○	●	○	●	○
1mm	2mm	1mm	2mm	1mm	2mm
PTFE Coated Brass		PTFE Coated Brass		PTFE Coated Brass	
●		●		●	

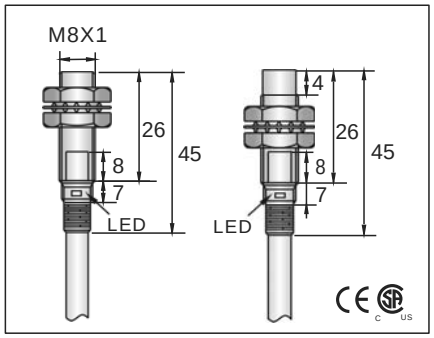

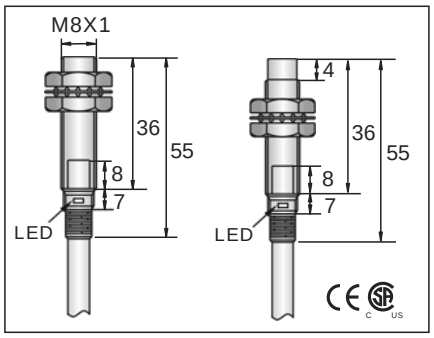

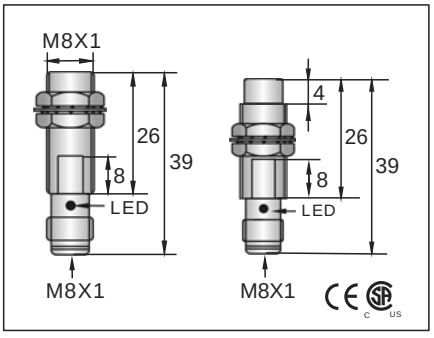

10-30VDC	10-30VDC	10-30VDC
<10%	<10%	<10%
<10mA	<10mA	<10mA
200mA	200mA	200mA
<0.01mA	<0.01mA	<0.01mA
-	-	-
-	-	-
<1.5V	<1.5V	<1.5V
2KHZ	2KHZ	2KHZ
0.1ms/0.1ms	0.1ms/0.1ms	0.1ms/0.1ms
<15%(Sr)	<15%(Sr)	<15%(Sr)
<1.0%(Sr)	<1.0%(Sr)	<1.0%(Sr)
IP67	IP67	IP67
-25°C - +70°C	-25°C - +70°C	-25°C - +70°C
<10%(Sr)	<10%(Sr)	<10%(Sr)
YES	YES	YES
220mA	220mA	220mA
<10ms	<10ms	<10ms
RFI>3V/m / EFT>1KV / ESD>4KV (contact)	RFI>3V/m / EFT>1KV / ESD>4KV (contact)	RFI>3V/m / EFT>1KV / ESD>4KV (contact)
IEC 60947-5-2,Part 7.4.1 / IEC 60947-5-2,Part 7.4.2	IEC 60947-5-2,Part 7.4.1 / IEC 60947-5-2,Part 7.4.2	IEC 60947-5-2,Part 7.4.1 / IEC 60947-5-2,Part 7.4.2
ETFE	ETFE	ETFE

DC INDUCTIVE SENSORS WELD FIELD IMMUNE

M 8		M 12		M 12	
●	○	●	○	●	○
1mm	2mm	2 mm	4 mm	2 mm	4 mm
PTFE Coated Brass		PTFE Coated Brass		PTFE Coated Brass	
●		●		●	

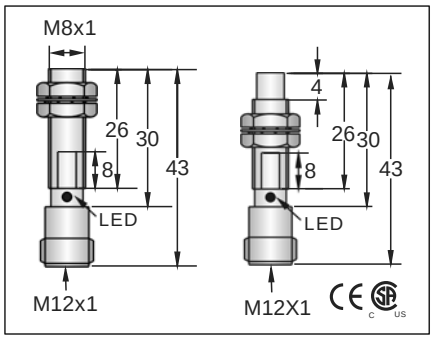

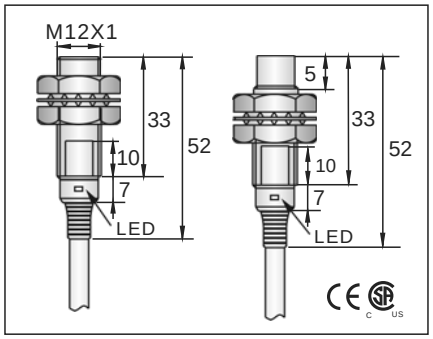

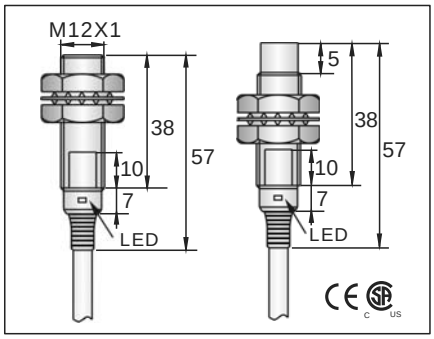

10-30VDC		10-30VDC		10-30VDC	
<10%		<10%		<10%	
<10mA		<10mA		<10mA	
200mA		200mA		200mA	
<0.01mA		<0.01mA		<0.01mA	
-		-		-	
-		-		-	
<1.5V		<1.5V		<1.5V	
2KHZ		2KHZ	1KHZ	2KHZ	1KHZ
0.1ms/0.1ms		0.1ms/0.1ms	0.2ms/0.2ms	0.1ms/0.1ms	0.2ms/0.2ms
<15%(Sr)		<15%(Sr)		<15%(Sr)	
<1.0%(Sr)		<1.0%(Sr)		<1.0%(Sr)	
IP67		IP67		IP67	
-25℃ - +70℃		-25℃ - +70℃		-25℃ - +70℃	
<10%(Sr)		<10%(Sr)		<10%(Sr)	
YES		YES		YES	
220mA		220mA		220mA	
<10ms		<10ms		<10ms	
RFI>3V/m / EFT>1KV / ESD>4KV (contact)		RFI>3V/m / EFT>1KV / ESD>4KV (contact)		RFI>3V/m / EFT>1KV / ESD>4KV (contact)	
IEC 60947-5-2,Part 7.4.1 / IEC 60947-5-2,Part 7.4.2		IEC 60947-5-2,Part 7.4.1 / IEC 60947-5-2,Part 7.4.2		IEC 60947-5-2,Part 7.4.1 / IEC 60947-5-2,Part 7.4.2	
ETFE		ETFE		ETFE	
WCM1-0801N-ARU4	33	WCM2-0802N-ARU4			
WCM1-0801N-BRU4	34	WCM2-0802N-BRU4			
WCM1-0801P-ARU4	35	WCM2-0802P-ARU4			
WCM1-0801P-BRU4	36	WCM2-0802P-BRU4			
			4ϕ 3x0.15		
			Approx.62 g	Approx.60 g	
				4ϕ 3x0.15	
				Approx.67 g	Approx.65 g
Approx.15 g					

DC INDUCTIVE SENSORS WELD FIELD IMMUNE

M 12	
●	○
2 mm	4 mm
PTFE Coated Brass	
●	

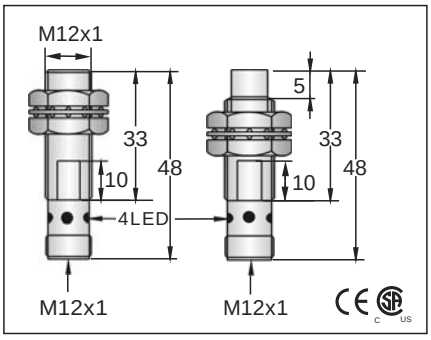

10-30VDC	
<10%	
<10mA	
200mA	
<0.01mA	
-	
-	
<1.5V	
2KHZ	1KHZ
0.1ms/0.1ms	0.2ms/0.2ms
<15%(Sr)	
<1.0%(Sr)	
IP67	
-25 °C - +70 °C	
<10%(Sr)	
YES	
220mA	
<10ms	
RFI>3V/m / EFT>1KV / ESD>4KV (contact)	
IEC 60947-5-2,Part 7.4.1 / IEC 60947-5-2,Part 7.4.2	
ETFE	

WCM1-1202N-ARS4	33	WCM2-1204N-ARS4
WCM1-1202N-BRS4	34	WCM2-1204N-BRS4
WCM1-1202P-ARS4	35	WCM2-1204P-ARS4
WCM1-1202P-BRS4	36	WCM2-1204P-BRS4

Approx.25 g	Approx.23 g

M 12	
●	○
2 mm	4 mm
PTFE Coated Brass	
●	

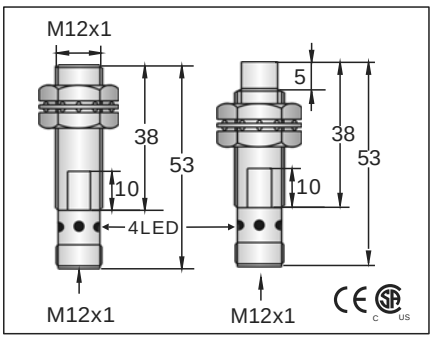

10-30VDC	
<10%	
<10mA	
200mA	
<0.01mA	
-	
-	
<1.5V	
2KHZ	1KHZ
0.1ms/0.1ms	0.2ms/0.2ms
<15%(Sr)	
<1.0%(Sr)	
IP67	
-25 °C - +70 °C	
<10%(Sr)	
YES	
220mA	
<10ms	
RFI>3V/m / EFT>1KV / ESD>4KV (contact)	
IEC 60947-5-2,Part 7.4.1 / IEC 60947-5-2,Part 7.4.2	
ETFE	

WCM1-1202N-ARU4	33	WCM2-1204N-ARU4
WCM1-1202N-BRU4	34	WCM2-1204N-BRU4
WCM1-1202P-ARU4	35	WCM2-1204P-ARU4
WCM1-1202P-BRU4	36	WCM2-1204P-BRU4

Approx.31 g	Approx.30 g

M 18	
●	○
5 mm	8 mm
PTFE Coated Brass	
●	

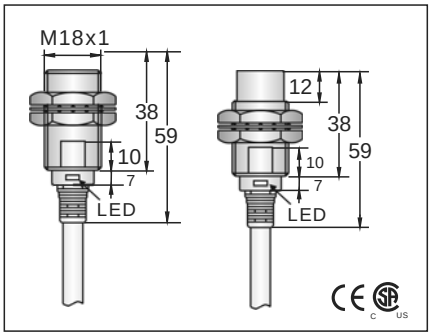

10-30VDC	
<10%	
<10mA	
200mA	
<0.01mA	
-	
-	
<1.5V	
1KHZ	500HZ
0.1ms/0.1ms	0.2ms/0.2ms
<15%(Sr)	
<1.0%(Sr)	
IP67	
-25 °C - +70 °C	
<10%(Sr)	
YES	
220mA	
<10ms	
RFI>3V/m / EFT>1KV / ESD>4KV (contact)	
IEC 60947-5-2,Part 7.4.1 / IEC 60947-5-2,Part 7.4.2	
ETFE	

5.0ϕ44x0.1	
Approx.132 g	Approx.134 g

DC INDUCTIVE SENSORS WELD FIELD IMMUNE

M18	
●	○
5 mm	8 mm
PTFE Coated Brass	
●	

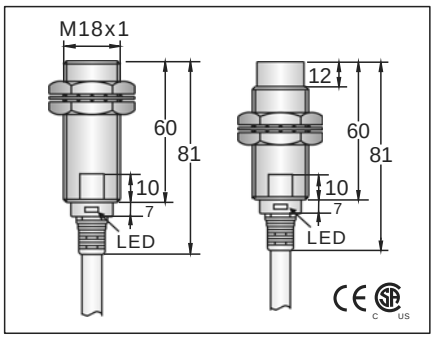

10-30VDC	
<10%	
<10mA	
200mA	
<0.01mA	
-	
-	
<1.5V	
1KHZ	500HZ
0.2ms/0.2ms	0.5ms/0.5ms
<15%(Sr)	
<1.0%(Sr)	
IP67	
-25 °C - +70 °C	
<10%(Sr)	
YES	
220mA	
<10ms	
RFI>3V/m / EFT>1KV / ESD>4KV (contact)	
IEC 60947-5-2,Part 7.4.1 / IEC 60947-5-2,Part 7.4.2	
ETFE	

5.0 ϕ 44x0.1
Approx.153 g / Approx.144 g

M 18	
●	○
5 mm	8 mm
PTFE Coated Brass	
●	

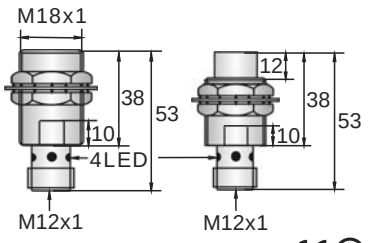

10-30VDC	
<10%	
<10mA	
200mA	
<0.01mA	
-	
-	
<1.5V	
1KHZ	500HZ
0.2ms/0.2ms	0.5ms/0.5ms
<15%(Sr)	
<1.0%(Sr)	
IP67	
-25 °C - +70 °C	
<10%(Sr)	
YES	
220mA	
<10ms	
RFI>3V/m / EFT>1KV / ESD>4KV (contact)	
IEC 60947-5-2,Part 7.4.1 / IEC 60947-5-2,Part 7.4.2	
ETFE	

Approx.50 g / Approx.50 g

M 18	
●	○
5 mm	8 mm
PTFE Coated Brass	
●	

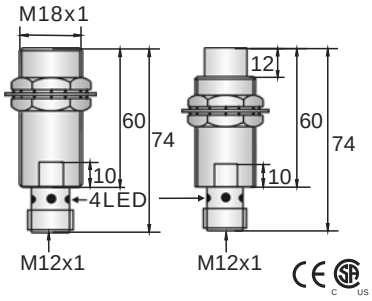

10-30VDC	
<10%	
<10mA	
200mA	
<0.01mA	
-	
-	
<1.5V	
1KHZ	500HZ
0.2ms/0.2ms	0.5ms/0.5ms
<15%(Sr)	
<1.0%(Sr)	
IP67	
-25 °C - +70 °C	
<10%(Sr)	
YES	
220mA	
<10ms	
RFI>3V/m / EFT>1KV / ESD>4KV (contact)	
IEC 60947-5-2,Part 7.4.1 / IEC 60947-5-2,Part 7.4.2	
ETFE	

WCM1-1805N-ARU4	33	WCM2-1808N-ARU4
WCM1-1805N-BRU4	34	WCM2-1808N-BRU4
WCM1-1805P-ARU4	35	WCM2-1808P-ARU4
WCM1-1805P-BRU4	36	WCM2-1808P-BRU4

Approx.94 g / Approx.91 g

DC INDUCTIVE SENSORS WELD FIELD IMMUNE

M 18	M 18		M 18	
●	●		●	○
5 mm	5 mm	8 mm	5 mm	8 mm
PTFE Coated Brass	PTFE Coated Brass		PTFE Coated Brass	
●	●		●	
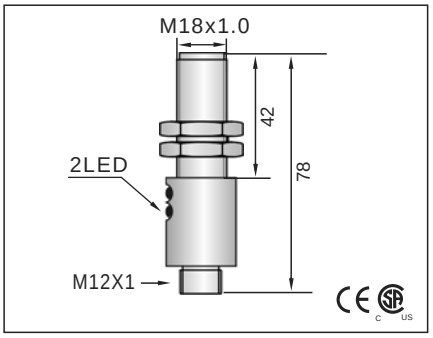	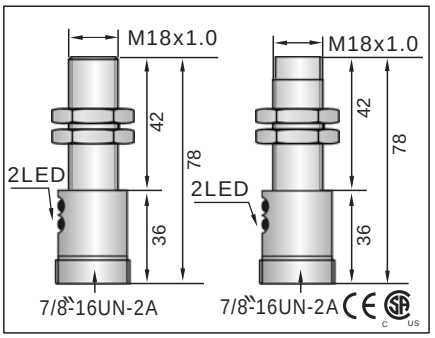		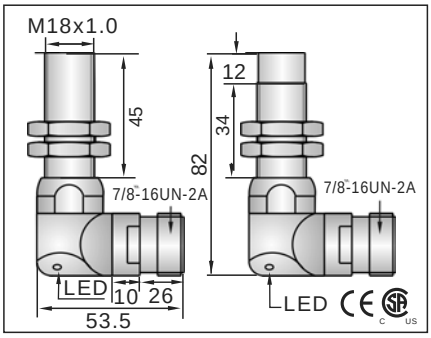	
10-30VDC	10-30VDC		10-30VDC	
<10%	<10%		<10%	
<10mA	<10mA		<10mA	
200mA	200mA		200mA	
<0.01mA	<0.01mA		<0.01mA	
-	-		-	
-	-		-	
<1.5V	<1.5V		<1.5V	
1KHZ	1kHZ	500HZ	1KHZ	500HZ
0.2ms/0.2ms	0.2ms/0.2ms	0.5ms/0.5ms	0.2ms/0.2ms	0.5ms/0.5ms
<15%(Sr)	<15%(Sr)		<15%(Sr)	
<1.0%(Sr)	<1.0%(Sr)		<1.0%(Sr)	
IP67	IP67		IP67	
-25°C - +70°C	-25°C - +70°C		-25°C - +70°C	
<10%(Sr)	<10%(Sr)		<10%(Sr)	
YES	YES		YES	
220mA	220mA		220mA	
<10ms	<10ms		<10ms	
RFI>3V/m / EFT>1KV / ESD>4KV (contact)	RFI>3V/m / EFT>1KV / ESD>4KV (contact)		RFI>3V/m / EFT>1KV / ESD>4KV (contact)	
IEC 60947-5-2,Part 7.4.1 / IEC 60947-5-2,Part 7.4.2	IEC 60947-5-2,Part 7.4.1 / IEC 60947-5-2,Part 7.4.2		IEC 60947-5-2,Part 7.4.1 / IEC 60947-5-2,Part 7.4.2	
ETFE	ETFE		ETFE	
WCM1-1805N-ARU4/2 33				
WCM1-1805N-BRU4/2 34				
WCM1-1805P-ARU4/2 35				
WCM1-1805P-BRU4/2 36				
Approx.94 g	Approx.94 g	Approx.91 g	Approx.251 g	Approx.283 g

AC INDUCTIVE SENSORS WELD FIELD IMMUNE

M 18			M 18			M 18		
●	○		●	○		●	○	
5 mm	8 mm		5 mm	8 mm		5 mm	8 mm	
PTFE Coated Brass			PTFE Coated Brass			PTFE Coated Brass		
●			●			●		
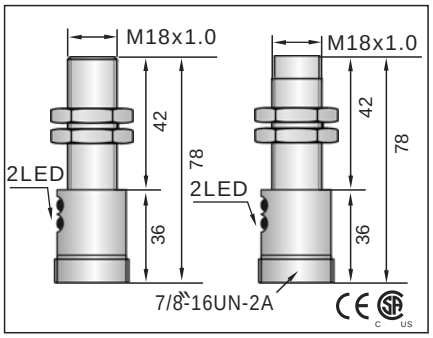			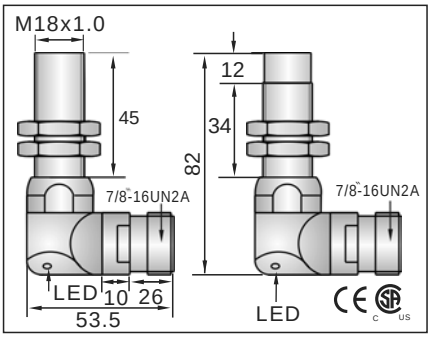			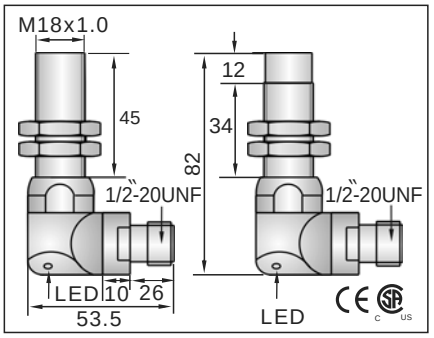		
20-250VAC			20-250VAC			20-250VAC		
-			-			-		
<1.8mA			<1.8mA			<1.8mA		
400mA			400mA			400mA		
<1.8mA			<1.8mA			<1.8mA		
5A(20ms)			5A(20ms)			5A(20ms)		
5mA			5mA			5mA		
<8VAC AT 200MA			<8VAC AT 400MA			<8VAC AT 400MA		
<25HZ			<25HZ			<25HZ		
10ms/10ms			10ms/10ms			10ms/10ms		
<15%(Sr)			<15%(Sr)			<15%(Sr)		
<1.0%(Sr)			<1.0%(Sr)			<1.0%(Sr)		
IP67			IP67			IP67		
-25°C - +70°C			-25°C - +70°C			-25°C - +70°C		
<10%(Sr)			<10%(Sr)			<10%(Sr)		
NO			NO			NO		
-			-			-		
-			-			-		
RFI>3V/m / EFT>1KV / ESD>4KV (contact)			RFI>3V/m / EFT>1KV / ESD>4KV (contact)			RFI>3V/m / EFT>1KV / ESD>4KV (contact)		
IEC 60947-5-2,Part 7.4.1 / IEC 60947-5-2,Part 7.4.2			IEC 60947-5-2,Part 7.4.1 / IEC 60947-5-2,Part 7.4.2			IEC 60947-5-2,Part 7.4.1 / IEC 60947-5-2,Part 7.4.2		
ETFE			ETFE			ETFE		
			WCM1-1805A-AZL3Y	65	WCM2-1808A-AZL3Y	WCM1-1805A-AUL3Y	56	WCM2-1808A-AUL3Y
			WCM1-1805A-BZL3Y	65	WCM2-1808A-BZL3Y	WCM1-1805A-BUL3Y	56	WCM2-1808A-BUL3Y
Approx.251 g			Approx.251 g		Approx.283 g	Approx.251 g		Approx.283 g