PART H-01 ~ H-05

NAMUR INDUCTIVE PROXIMITY SWITCH

Diameter	ϕ6.5		M 8		M 12	
● Shielded ○ non-Shielded	●	○	●	○	●	○
Switching Distance Sn mm	1 mm	2 mm	1 mm	2 mm	2 mm	4 mm
Housing Material	stainless steel or nickel plated brass		stainless steel or nickel plated brass		stainless steel or nickel plated brass	
● With LED ○ Without LED	○		○		○	
Dimensions (unit: mm)	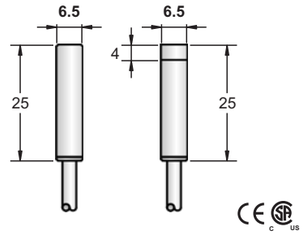		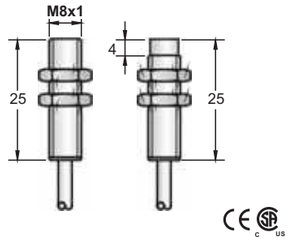		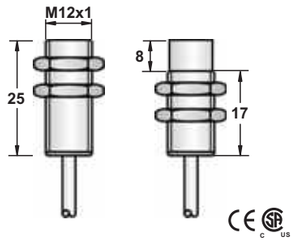	
Operating Voltage	6-12VDC		6-12VDC		6-12VDC	
Ripple	-		-		-	
No Load Current	<1.1mA(OFF)	>2.2mA(ON)	<1.1mA(OFF)	>2.2mA(ON)	>2.2mA(OFF)	<1.1mA(ON)
Max. Load Current	-		-		-	
Leakge Current	-		-		-	
Surge Current	-		-		-	
Min. Load Current	-		-		-	
Voltage Drop	-		-		-	
Switching Frequency	0.5KHZ		2KHZ	1KHZ	1KHZ	0.5KHZ
Response Time	0.2ms/0.2ms		0.05ms/0.05ms	0.1ms/0.1ms	0.1ms/0.1ms	0.2ms/0.2ms
Switching Hysteresis	<15%(Sr)		<15%(Sr)		<15%(Sr)	
Repeat Accuracy	-		-		-	
Protection Category	IP67		IP67		IP67	
Operating Temperature	-25°C - +70°C		-25°C - +70°C		-25°C - +70°C	
Temperature Drift	<2%(Sr)		<2%(Sr)		<2%(Sr)	
Short Circuit Protection	-		-		-	
Overload Trip Point	-		-		-	
Time Delay Before Availability	<10ms		<10ms		<10ms	
EMC	RFI>3V/m / EFT>1KV / ESD>4KV (contact)		RFI>3V/m / EFT>1KV / ESD>4KV (contact)		RFI>3V/m / EFT>1KV / ESD>4KV (contact)	
Shock / Vibration	IEC 60947-5-2,Part 7.4.1 / IEC 60947-5-2,Part 7.4.2		IEC 60947-5-2,Part 7.4.1 / IEC 60947-5-2,Part 7.4.2		IEC 60947-5-2,Part 7.4.1 / IEC 60947-5-2,Part 7.4.2	
Material Active Face	POM		POM		POM	PBT
DC 3 wire 10-30V NPN N.O.						
DC 3 wire 10-30V NPN N.C.						
DC 3 wire 10-30V PNP N.O.						
DC 3 wire 10-30V PNP N.C.						
DC 4 wire 10-30V Changeover PNP (N.O. & N.C.)						
DC 4 wire 10-30V Changeover NPN (N.O. & N.C.)						
DC 2 wire 10-60V N.O.						
DC 2 wire 10-60V N.C.						
DC 3 wire 10-55v NPN N.O. or NAMUR	FCU1-D0601NU	21 FCU2-D0602NU	FCM1-0801NU	21 FCM2-0802NU	FCM1-1202NU	21 FCM2-1204NU
DC 3 wire 10-55v NPN N.C.						
DC 3 wire 10-55v PNP N.O.						
DC 3 wire 10-55v PNP N.C.						
DC 3 wire 5-36v NPN N.O.						
DC 3 wire 5-36v NPN N.C.						
DC 3 wire 5-36v PNP N.O.						
DC 3 wire 5-36v PNP N.C.						
AC/DC 4 wire 5-36v Changeover PNP (N.O. & N.C.)						
AC/DC 4 wire 5-36v Changeover NPN (N.O. & N.C.)						
Remark						
Cable 2M (PVC)	3ϕ2x0.15		3ϕ2x0.15		4ϕ2x0.15	
Weight	Approx.26 g		Approx.34 g		Approx.42 g	Approx.41 g

NAMUR INDUCTIVE PROXIMITY SWITCH

M 18		M 30		Q 40s		
●	○	●	○	●	○	○
5 mm	8 mm	10 mm	15 mm	15 mm	20 mm	30 mm
stainless steel or nickel plated brass		stainless steel or nickel plated brass		PBT RESIN		
○		○		○		

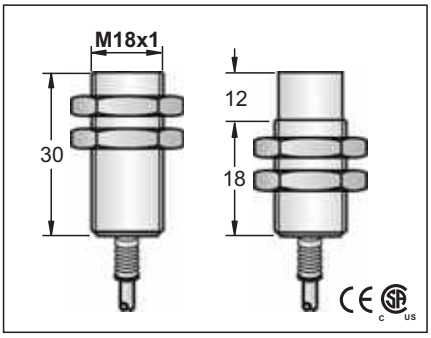

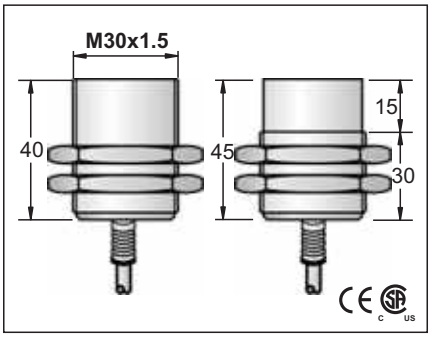

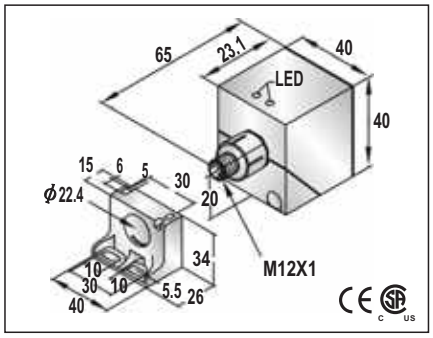

M 18		M 30		Q 40s	
6-12VDC		6-12VDC		6-12VDC	
-		-		-	
>2.2mA(OFF)	<1.1mA(ON)	>2.2mA(OFF)	<1.1mA(ON)	>2.2mA(OFF)	<1.1mA(ON)
-		-		-	
-		-		-	
-		-		-	
-		-		-	
-		-		-	
500HZ	300HZ	300HZ	100HZ	100HZ	
0.2ms/0.2ms	0.5ms/0.5ms	0.5ms/0.5ms	1ms/1ms	1ms/1ms	
<15%(Sr)		<15%(Sr)		<15%(Sr)	
-		-		-	
IP67		IP67		IP67	
-25 °C - +70 °C		-25 °C - +70 °C		-25 °C - +70 °C	
<2%(Sr)		<2%(Sr)		<2%(Sr)	
-		-		-	
-		-		-	
<10ms		<10ms		<10ms	
RFI>3V/m / EFT>1KV / ESD>4KV (contact)		RFI>3V/m / EFT>1KV / ESD>4KV (contact)		RFI>3V/m / EFT>1KV / ESD>4KV (contact)	
IEC 60947-5-2,Part 7.4.1 / IEC 60947-5-2,Part 7.4.2		IEC 60947-5-2,Part 7.4.1 / IEC 60947-5-2,Part 7.4.2		IEC 60947-5-2,Part 7.4.1 / IEC 60947-5-2,Part 7.4.2	
PBT		PBT		PBT	
FCM1-1805NU	21	FCM2-1808NU	FCM1-3010NU	21	FCM2-3015NU

NAMUR INDUCTIVE PLASTIC HOUSING PROXIMITY SWITCH

M 12		M 18		M30	
●	○	●	○	●	○
2 mm	4 mm	5 mm	8 mm	10 mm	15 mm
PBT RESIN		PBT RESIN		PBT RESIN	
○		○		○	
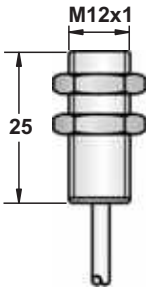		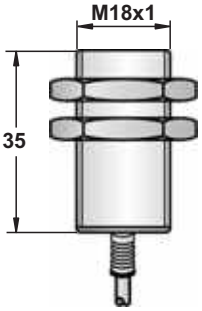		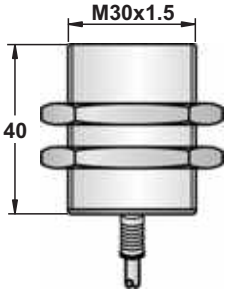	
6-12VDC		6-12VDC		6-12VDC	
-		-		-	
>2.2mA(OFF)	<1.1mA(ON)	>2.2mA(OFF)	<1.1mA(ON)	>2.2mA(OFF)	<1.1mA(ON)
-		-		-	
-		-		-	
-		-		-	
-		-		-	
-		-		-	
1KHZ	500HZ	500HZ	300HZ	300HZ	100HZ
0.1ms/0.1ms	0.2ms/0.2ms	0.2ms/0.2ms	0.5ms/0.5ms	0.5ms/0.5ms	1ms/1ms
<15%(Sr)		<15%(Sr)		<15%(Sr)	
-		-		-	
IP67		IP67		IP67	
-25 °C - +70 °C		-25 °C - +70 °C		-25 °C - +70 °C	
<2%(Sr)		<2%(Sr)		<2%(Sr)	
-		-		-	
-		-		-	
<10ms		<10ms		<10ms	
RFI>3V/m / EFT>1KV / ESD>4KV (contact)		RFI>3V/m / EFT>1KV / ESD>4KV (contact)		RFI>3V/m / EFT>1KV / ESD>4KV (contact)	
IEC 60947-5-2,Part 7.4.1 / IEC 60947-5-2,Part 7.4.2		IEC 60947-5-2,Part 7.4.1 / IEC 60947-5-2,Part 7.4.2		IEC 60947-5-2,Part 7.4.1 / IEC 60947-5-2,Part 7.4.2	
PBT		PBT		PBT	
FCP1-1202NU	21	FCP2-1204NU			
4ϕ2x0.15		4.8ϕ44x0.1		4.8ϕ44x0.1	
Approx.52 g		Approx.102 g		Approx.131 g	