PART B-01 ~ B-13

SIDE SENSING DC INDUCTIVE PROXIMITY SWITCH

Diameter	ϕ4	ϕ4	ϕ4
● Shielded ○ non-Shielded	●	●	●
Switching Distance Sn mm	0.8 mm	0.8 mm	0.8 mm
Housing Material	stainless steel	stainless steel	stainless steel
● With LED ○ Without LED	●	●	●
Dimensions (unit: mm)	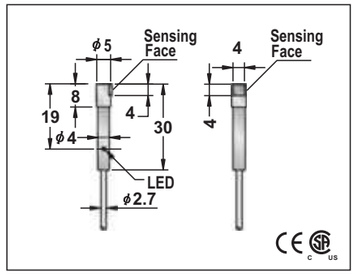	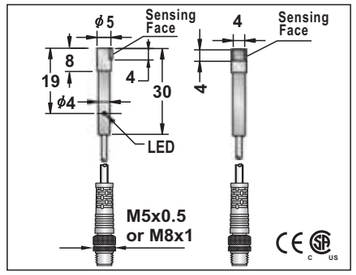	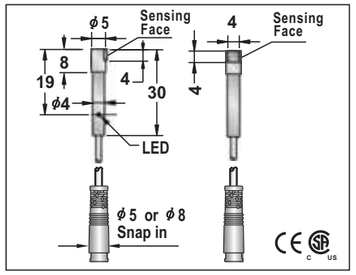
Operating Voltage	10-30VDC or 5-36V	10-30VDC or 5-36V	10-30VDC or 5-36V
Ripple	<10%	<10%	<10%
No Load Current	<10mA	<10mA	<10mA
Max. Load Current	200mA	200mA	200mA
Leakge Current	<0.01mA	<0.01mA	<0.01mA
Surge Current	-	-	-
Min. Load Current	-	-	-
Voltage Drop	<1.5V	<1.5V	<1.5V
Switching Frequency	2KHZ	2KHZ	2KHZ
Response Time	0.1ms/0.1ms	0.1ms/0.1ms	0.1ms/0.1ms
Switching Hysteresis	<15%(Sr)	<15%(Sr)	<15%(Sr)
Repeat Accuracy	<1.0%(Sr)	<1.0%(Sr)	<1.0%(Sr)
Protection Category	IP67	IP67	IP67
Operating Temperature	-25°C - +70°C	-25°C - +70°C	-25°C - +70°C
Temperature Drift	<10%(Sr)	<10%(Sr)	<10%(Sr)
Short Circuit Protection	YES	YES	YES
Overload Trip Point	220mA	220mA	220mA
Time Delay Before Availability	<10ms	<10ms	<10ms
EMC	RFI>3V/m / EFT>1KV / ESD>4KV (contact)	RFI>3V/m / EFT>1KV / ESD>4KV (contact)	RFI>3V/m / EFT>1KV / ESD>4KV (contact)
Shock / Vibration	IEC 60947-5-2,Part 7.4.1 / IEC 60947-5-2,Part 7.4.2	IEC 60947-5-2,Part 7.4.1 / IEC 60947-5-2,Part 7.4.2	IEC 60947-5-2,Part 7.4.1 / IEC 60947-5-2,Part 7.4.2
Material Active Face	POM	POM	POM

DC 3 wire 10-30V NPN N.O.	FCU1-D040.8N-A3U2T	1	FCU1-D040.8N-A3U0.2T/P5	25	FCU1-D040.8N-A3U0.2T/P8	29	FCU1-D040.8N-A3U0.2T/SN5	25	FCU1-D040.8N-A3U0.2T/SN8	29
DC 3 wire 10-30V NPN N.C.	FCU1-D040.8N-B3U2T	2	FCU1-D040.8N-B3U0.2T/P5	26	FCU1-D040.8N-B3U0.2T/P8	30	FCU1-D040.8N-B3U0.2T/SN5	26	FCU1-D040.8N-B3U0.2T/SN8	30
DC 3 wire 10-30V PNP N.O.	FCU1-D040.8P-A3U2T	3	FCU1-D040.8P-A3U0.2T/P5	27	FCU1-D040.8P-A3U0.2T/P8	31	FCU1-D040.8P-A3U0.2T/SN5	27	FCU1-D040.8P-A3U0.2T/SN8	31
DC 3 wire 10-30V PNP N.C.	FCU1-D040.8P-B3U2T	4	FCU1-D040.8P-B3U0.2T/P5	28	FCU1-D040.8P-B3U0.2T/P8	32	FCU1-D040.8P-B3U0.2T/SN5	28	FCU1-D040.8P-B3U0.2T/SN8	32
DC 4 wire 10-30V Changeover PNP (N.O. & N.C.)										
DC 4 wire 10-30V Changeover NPN (N.O. & N.C.)										
DC 2 wire 10-60V N.O.										
DC 2 wire 10-60V N.C.										
DC 3 wire 10-55v NPN N.O. or NAMUR										
DC 3 wire 10-55v NPN N.C.										
DC 3 wire 10-55v PNP N.O.										
DC 3 wire 10-55v PNP N.C.										
DC 3 wire 5-36V NPN N.O.	ICU1-D040.8N-A3U2T	1	ICU1-D040.8N-A3U0.2T/P5	25	ICU1-D040.8N-A3U0.2T/P8	29	ICU1-D040.8N-A3U0.2T/SN5	25	ICU1-D040.8N-A3U0.2T/SN8	29
DC 3 wire 5-36V NPN N.C.	ICU1-D040.8N-B3U2T	2	ICU1-D040.8N-B3U0.2T/P5	26	ICU1-D040.8N-B3U0.2T/P8	30	ICU1-D040.8N-B3U0.2T/SN5	26	ICU1-D040.8N-B3U0.2T/SN8	30
DC 3 wire 5-36V PNP N.O.	ICU1-D040.8P-A3U2T	3	ICU1-D040.8P-A3U0.2T/P5	27	ICU1-D040.8P-A3U0.2T/P8	31	ICU1-D040.8P-A3U0.2T/SN5	27	ICU1-D040.8P-A3U0.2T/SN8	31
DC 3 wire 5-36V PNP N.C.	ICU1-D040.8P-B3U2T	4	ICU1-D040.8P-B3U0.2T/P5	28	ICU1-D040.8P-B3U0.2T/P8	32	ICU1-D040.8P-B3U0.2T/SN5	28	ICU1-D040.8P-B3U0.2T/SN8	32
DC 4 wire 5-36V Changeover PNP (N.O & N.C.)										
DC 4 wire 5-36V Changeover NPN (N.O & N.C.)										

Remark	NAMUR type specifications see page 23.	FCU***/P5 └─M5 Pigtail mode FCU***/P8 └─M8 Pigtail mode	FCU***/SN5 └─ϕ5 Pigtail mode FCU***/SN8 └─ϕ8 Pigtail mode
Cable 2M (PVC)	2.7ϕ3x0.15	2.7ϕ3x0.15	2.7ϕ3x0.15
Weight	approx.25 g	approx.25 g / Approx.26 g	approx.25 g / Approx.26 g

SIDE SENSING DC INDUCTIVE PROXIMITY SWITCH

ϕ4	ϕ4	M5
●	●	●
0.8 mm	0.8 mm	0.8 mm
stainless steel	stainless steel	stainless steel
●	●	●
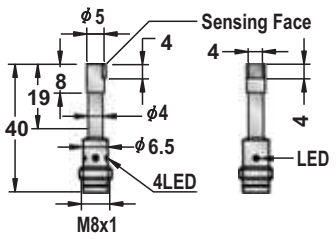	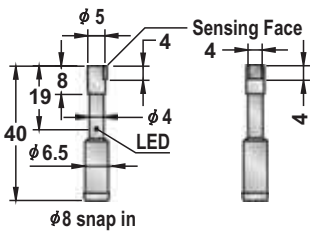	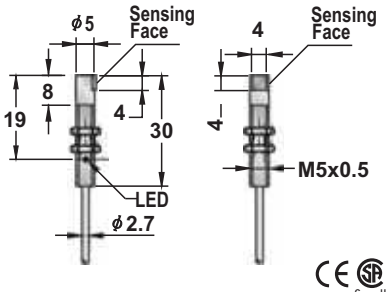
10-30VDC or 5-36V	10-30VDC or 5-36V	10-30VDC or 5-36V
<10%	<10%	<10%
<10mA	<10mA	<10mA
200mA	200mA	200mA
<0.01mA	<0.01mA	<0.01mA
-	-	-
-	-	-
<1.5V	<1.5V	<1.5V
2KHZ	2KHZ	2KHZ
0.1ms/0.1ms	0.1ms/0.1ms	0.1ms/0.1ms
<15%(Sr)	<15%(Sr)	
<1.0%(Sr)	<1.0%(Sr)	<1.0%(Sr)
IP67	IP67	IP67
-25°C - +70°C	-25°C - +70°C	-25°C - +70°C
<10%(Sr)	<10%(Sr)	<10%(Sr)
YES	YES	YES
220mA	220mA	220mA
<10ms	<10ms	<10ms
RFI>3V/m / EFT>1KV / ESD>4KV (contact)	RFI>3V/m / EFT>1KV / ESD>4KV (contact)	RFI>3V/m / EFT>1KV / ESD>4KV (contact)
IEC 60947-5-2,Part 7.4.1 / IEC 60947-5-2,Part 7.4.2	IEC 60947-5-2,Part 7.4.1 / IEC 60947-5-2,Part 7.4.2	IEC 60947-5-2,Part 7.4.1 / IEC 60947-5-2,Part 7.4.2
POM	POM	POM

FCU1-D040.8N-ACU3T	29	FCU1-D040.8N-ACU3T/SN8	29	FCU1-050.8N-A3U2T	1
FCU1-D040.8N-BCU3T	29	FCU1-D040.8N-BCU3T/SN8	29	FCU1-050.8N-B3U2T	2
FCU1-D040.8P-ACU3T	30	FCU1-D040.8P-ACU3T/SN8	30	FCU1-050.8P-A3U2T	3
FCU1-D040.8P-BCU3T	30	FCU1-D040.8P-BCU3T/SN8	30	FCU1-050.8P-B3U2T	4
				FCU1-050.8NUT	21
ICU1-D040.8N-ACU3T	29	ICU1-D040.8N-ACU3T/SN8	29	ICU1-050.8N-A3U2T	1
ICU1-D040.8N-BCU3T	29	ICU1-D040.8N-BCU3T/SN8	29	ICU1-050.8N-B3U2T	2
ICU1-D040.8P-ACU3T	30	ICU1-D040.8P-ACU3T/SN8	30	ICU1-050.8P-A3U2T	3
ICU1-D040.8P-BCU3T	30	ICU1-D040.8P-BCU3T/SN8	30	ICU1-050.8P-B3U2T	4

Connecting cable: M8 female pico-style,screw locking,with moulded cable.	Connecting cable: Female pico-style snap-in device,with moulded cable.	
		2.7ϕ3x0.15
approx.14 g	approx.14 g	Approx.25 g

SIDE SENSING DC INDUCTIVE PROXIMITY SWITCH

M5	M5	M5
●	●	●
0.8 mm	0.8 mm	0.8 mm
stainless steel	stainless steel	stainless steel
●	●	●

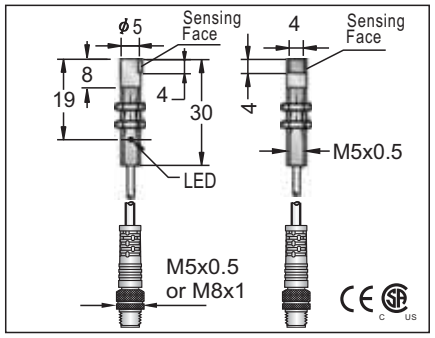

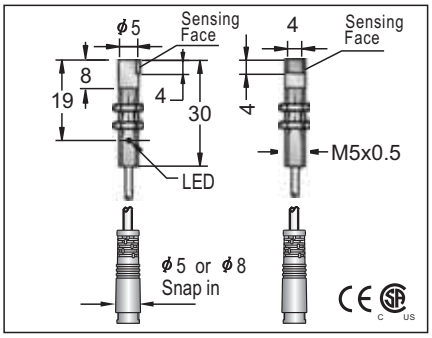

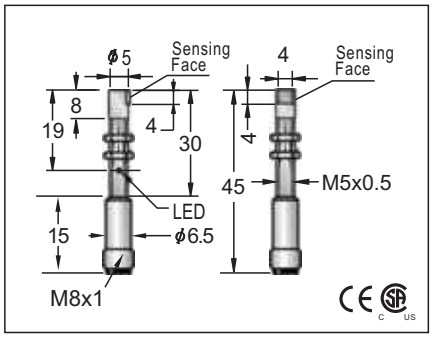

10-30VDC or 5-36VDC	10-30VDC or 5-36VDC	10-30VDC or 5-36VDC
<10%	<10%	<10%
<10mA	<10mA	<10mA
200mA	200mA	200mA
<0.01mA	<0.01mA	<0.01mA
-	-	-
-	-	-
<1.5V	<1.5V	<1.5V
2KHZ	2KHZ	2KHZ
0.1ms/0.1ms	0.1ms/0.1ms	0.1ms/0.1ms
<1.0%(Sr)	<1.0%(Sr)	<1.0%(Sr)
IP67	IP67	IP67
-25°C - +70°C	-25°C - +70°C	-25°C - +70°C
<10%(Sr)	<10%(Sr)	<10%(Sr)
YES	YES	YES
220mA	220mA	220mA
<10ms	<10ms	<10ms
RFI>3V/m / EFT>1KV / ESD>4KV (contact)	RFI>3V/m / EFT>1KV / ESD>4KV (contact)	RFI>3V/m / EFT>1KV / ESD>4KV (contact)
IEC 60947-5-2,Part 7.4.1 / IEC 60947-5-2,Part 7.4.2	IEC 60947-5-2,Part 7.4.1 / IEC 60947-5-2,Part 7.4.2	IEC 60947-5-2,Part 7.4.1 / IEC 60947-5-2,Part 7.4.2
POM	POM	POM

FCU1-050.8N-A3U0.2T/P5	25	FCU1-050.8N-A3U0.2T/P8	29	FCU1-050.8N-A3U0.2T/SN5	25	FCU1-050.8N-A3U0.2T/SN8	29
FCU1-050.8N-B3U0.2T/P5	26	FCU1-050.8N-B3U0.2T/P8	30	FCU1-050.8N-B3U0.2T/SN5	26	FCU1-050.8N-B3U0.2T/SN8	30
FCU1-050.8P-A3U0.2T/P5	27	FCU1-050.8P-A3U0.2T/P8	31	FCU1-050.8P-A3U0.2T/SN5	27	FCU1-050.8P-A3U0.2T/SN8	31
FCU1-050.8P-B3U0.2T/P5	28	FCU1-050.8P-B3U0.2T/P8	32	FCU1-050.8P-B3U0.2T/SN5	28	FCU1-050.8P-B3U0.2T/SN8	32
ICU1-050.8N-A3U0.2T/P5	25	ICU1-050.8N-A3U0.2T/P8	29	ICU1-050.8N-A3U0.2T/SN5	25	ICU1-050.8N-A3U0.2T/SN8	29
ICU1-050.8N-B3U0.2T/P5	26	ICU1-050.8N-B3U0.2T/P8	30	ICU1-050.8N-B3U0.2T/SN5	26	ICU1-050.8N-B3U0.2T/SN8	30
ICU1-050.8P-A3U0.2T/P5	27	ICU1-050.8P-A3U0.2T/P8	31	ICU1-050.8P-A3U0.2T/SN5	27	ICU1-050.8P-A3U0.2T/SN8	31
ICU1-050.8P-B3U0.2T/P5	28	ICU1-050.8P-B3U0.2T/P8	32	ICU1-050.8P-B3U0.2T/SN5	28	ICU1-050.8P-B3U0.2T/SN8	32

FCU1-050.8N-ACU3T	29
FCU1-050.8N-BCU3T	29
FCU1-050.8P-ACU3T	30
FCU1-050.8P-BCU3T	30

FCU***/P5
└─M5 Pigtail mode
FCU***/P8
└─M8 Pigtail mode

FCU***/SN5
└─ϕ5 Pigtail mode
FCU***/SN8
└─ϕ8 Pigtail mode

2.7ϕ3x0.15		2.7ϕ3x0.15	
Approx.25 g	Approx.26 g	Approx.25 g	Approx.26 g	Approx.25 g

SIDE SENSING DC INDUCTIVE PROXIMITY SWITCH

ϕ 6.5			ϕ 6.5		ϕ 6.5		
●	●		●		●	●	
1.0mm	1.5mm		1.5mm		1.0mm	1.5mm	
stainless steel			stainless steel or nickel plated brass		stainless steel		
●			●		●		

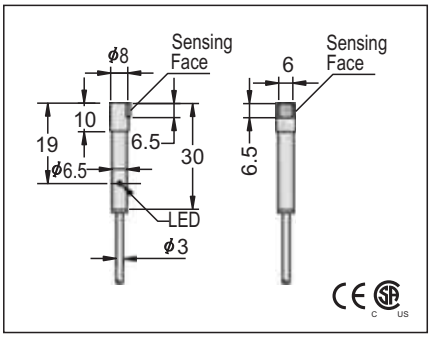

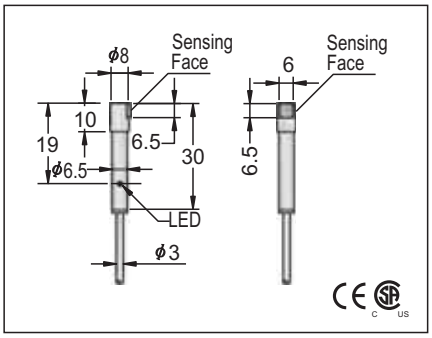

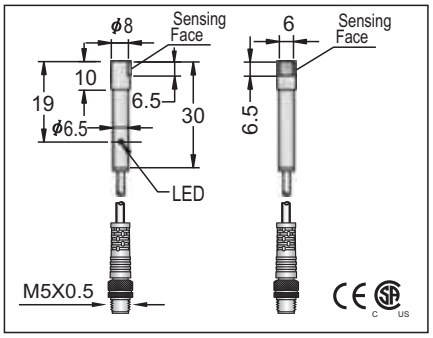

10-30VDC or 5-36VDC			6-12VDC		10-30VDC or 5-36VDC		
<10%			<10%		<10%		
<10mA			<1.1mA(OFF) or <2.2mA(ON)		<10mA		
200mA			-		200mA		
<0.01mA			-		<0.01mA		
-			-		-		
-			-		-		
<1.5V(10-30V) or <1.0V(5-36V)			-		<1.5V(10-30V) or <1.0V(5-36V)		
2KHZ			0.5KHZ		2KHZ		
0.1ms/0.1ms			0.2ms/0.2ms		0.1ms/0.1ms		
<15%(Sr)			<15%(Sr)		<15%(Sr)		
<1.0%(Sr)			-		<1.0%(Sr)		
IP67			IP67		IP67		
-25℃ - +70℃			-25℃ - +70℃		-25℃ - +70℃		
<10%(Sr)			<2%(Sr)		<10%(Sr)		
YES			-		YES		
220mA			-		220mA		
<10ms			<10ms		<10ms		
RFI>3V/m / EFT>1KV / ESD>4KV (contact)			RFI>3V/m / EFT>1KV / ESD>4KV (contact)		RFI>3V/m / EFT>1KV / ESD>4KV (contact)		
IEC 60947-5-2,Part 7.4.1 / IEC 60947-5-2,Part 7.4.2			IEC 60947-5-2,Part 7.4.1 / IEC 60947-5-2,Part 7.4.2		IEC 60947-5-2,Part 7.4.1 / IEC 60947-5-2,Part 7.4.2		
POM			POM		POM		
FCU1-D0601N-A3U2T	1				**FCU1-D0601N-A3U0.2T/P5**	25	
FCU1-D0601N-B3U2T	2				**FCU1-D0601N-B3U0.2T/P5**	26	
FCU1-D0601P-A3U2T	3				**FCU1-D0601P-A3U0.2T/P5**	27	
FCU1-D0601P-B3U2T	4				**FCU1-D0601P-B3U0.2T/P5**	28	
			FCU1-D061.5NUT	21			
	1	**ICU1-D061.5N-A3U2T**				25	**ICU1-D061.5N-A3U0.2T/P5**
	2	**ICU1-D061.5N-B3U2T**				26	**ICU1-D061.5N-B3U0.2T/P5**
	3	**ICU1-D061.5P-A3U2T**				27	**ICU1-D061.5P-A3U0.2T/P5**
	4	**ICU1-D061.5P-B3U2T**				28	**ICU1-D061.5P-B3U0.2T/P5**
5-36v: ICU*-******-**** type switching distance Sn=1.5mm.					5-36v: ICU*-******-**** type switching distance Sn=1.5mm.		
3 ϕ 3x0.15			3 ϕ 2x0.15		3 ϕ 3x0.15		
Approx.38 g			Approx.26 g		Approx.38 g	Approx.39 g	

SIDE SENSING DC INDUCTIVE PROXIMITY SWITCH

ϕ 6.5	
●	●
1.0mm	1.5mm
stainless steel	
●	

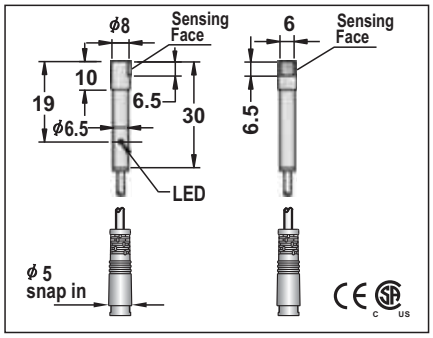

10-30VDC or 5-36VDC	
<10%	
<10mA	
200mA	
<0.01mA	
-	
-	
<1.5V(10-30V) or <1.0V(5-36V)	
2KHZ	
0.1ms/0.1ms	
<15%(Sr)	
<1.0%(Sr)	
IP67	
-25℃ - +70℃	
<10%(Sr)	
YES	
220mA	
<10ms	
RFI>3V/m / EFT>1KV / ESD>4KV (contact)	
IEC 60947-5-2,Part 7.4.1 / IEC 60947-5-2,Part 7.4.2	
POM	

FCU1-D0601N-A3U0.2T/SN5	25	
FCU1-D0601N-B3U0.2T/SN5	26	
FCU1-D0601P-A3U0.2T/SN5	27	
FCU1-D0601P-B3U0.2T/SN5	28	
	25	ICU1-D061.5N-A3U0.2T/SN5
	26	ICU1-D061.5N-B3U0.2T/SN5
	27	ICU1-D061.5P-A3U0.2T/SN5
	28	ICU1-D061.5P-B3U0.2T/SN5

5-36V: ICU*-******-**** type switching distance Sn=1.5mm.

3 ϕ 3x0.15	
Approx.38 g	Approx.39 g

ϕ 6.5	
●	●
1.0mm	1.5mm
stainless steel	
●	

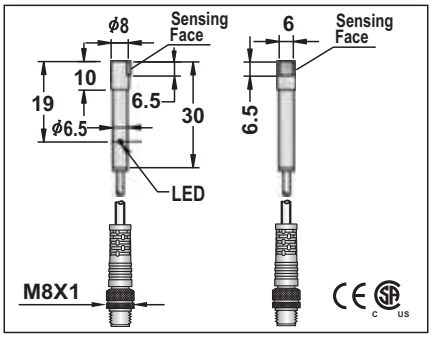

10-30VDC or 5-36VDC	
<10%	
<10mA	
200mA	
<0.01mA	
-	
-	
<1.5V(10-30V) or <1.0V(5-36V)	
2KHZ	
0.1ms/0.1ms	
<15%(Sr)	
<1.0%(Sr)	
IP67	
-25℃ - +70℃	
<10%(Sr)	
YES	
220mA	
<10ms	
RFI>3V/m / EFT>1KV / ESD>4KV (contact)	
IEC 60947-5-2,Part 7.4.1 / IEC 60947-5-2,Part 7.4.2	
POM	

FCU1-D0601N-A3U0.2T/P8	29	
FCU1-D0601N-B3U0.2T/P8	30	
FCU1-D0601P-A3U0.2T/P8	31	
FCU1-D0601P-B3U0.2T/P8	32	
	29	ICU1-D061.5N-A3U0.2T/P8
	30	ICU1-D061.5N-B3U0.2T/P8
	31	ICU1-D061.5P-A3U0.2T/P8
	32	ICU1-D061.5P-B3U0.2T/P8

5-36V: ICU*-******-**** type switching distance Sn=1.5mm.

3 ϕ 3x0.15	
Approx.38 g	Approx.39 g

ϕ 6.5	
●	●
1.0mm	1.5mm
stainless steel	
●	

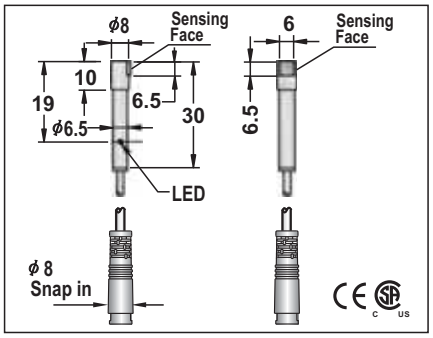

10-30VDC or 5-36VDC	
<10%	
<10mA	
200mA	
<0.01mA	
-	
-	
<1.5V(10-30V) or <1.0V(5-36V)	
2KHZ	
0.1ms/0.1ms	
<15%(Sr)	
<1.0%(Sr)	
IP67	
-25℃ - +70℃	
<10%(Sr)	
YES	
220mA	
<10ms	
RFI>3V/m / EFT>1KV / ESD>4KV (contact)	
IEC 60947-5-2,Part 7.4.1 / IEC 60947-5-2,Part 7.4.2	
POM	

FCU1-D0601N-A3U0.2T/SN8	29	
FCU1-D0601N-B3U0.2T/SN8	30	
FCU1-D0601P-A3U0.2T/SN8	31	
FCU1-D0601P-B3U0.2T/SN8	32	
	29	ICU1-D061.5N-A3U0.2T/SN8
	30	ICU1-D061.5N-B3U0.2T/SN8
	31	ICU1-D061.5P-A3U0.2T/SN8
	32	ICU1-D061.5P-B3U0.2T/SN8

5-36V: ICU*-******-**** type switching distance Sn=1.5mm.

3 ϕ 3x0.15	
Approx.38 g	Approx.39 g

SIDE SENSING DC INDUCTIVE PROXIMITY SWITCH

ϕ6.5		
●	●	
1.0mm	1.5mm	
stainless steel only		
●		
10-30VDC or 5-36VDC		
<10%		
<10mA		
200mA		
<0.01mA		
-		
-		
<1.5(10-30V) or <1.0V(5-36V)		
2KHZ		
0.1ms/0.1ms		
<15%(Sr)		
<1.0%(Sr)		
IP67		
-25℃ - +70℃		
<10%(Sr)		
YES		
220mA		
<10ms		
RFI>3V/m / EFT>1KV / ESD>4KV (contact)		
IEC 60947-5-2,Part 7.4.1 / IEC 60947-5-2,Part 7.4.2		
POM		
FCU1-D0601N-ACU3T	29	
FCU1-D0601N-BCU3T	29	
FCU1-D0601P-ACU3T	30	
FCU1-D0601P-BCU3T	30	
	29	ICU1-D061.5N-ACU3T
	29	ICU1-D061.5N-BCU3T
	30	ICU1-D061.5P-ACU3T
	30	ICU1-D061.5P-BCU3T
5-36V: ICU*-******-**** type switching distance Sn=1.5mm.		
Approx.15 g		

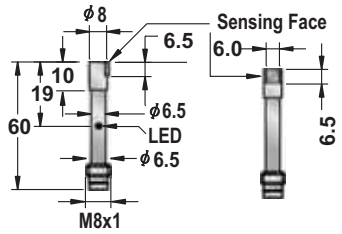

ϕ6.5		
●		
1.0mm	1.5mm	
stainless steel only		
●		
10-30VDC or 5-36VDC		
<10%		
<10mA		
200mA		
<0.01mA		
-		
-		
<1.5(10-30V) or <1.0V(5-36V)		
2KHZ		
0.1ms/0.1ms		
<15%(Sr)		
<1.0%(Sr)		
IP67		
-25℃ - +70℃		
<10%(Sr)		
YES		
220mA		
<10ms		
RFI>3V/m / EFT>1KV / ESD>4KV (contact)		
IEC 60947-5-2,Part 7.4.1 / IEC 60947-5-2,Part 7.4.2		
POM		
FCU1-D0601N-ARU3T	29	
FCU1-D0601N-BRU3T	29	
FCU1-D0601P-ARU3T	30	
FCU1-D0601P-BRU3T	30	
	29	ICU1-D061.5N-ARU3T
	29	ICU1-D061.5N-BRU3T
	30	ICU1-D061.5P-ARU3T
	30	ICU1-D061.5P-BRU3T
5-36V: ICU*-******-**** type switching distance Sn=1.5mm.		
Approx.28 g		

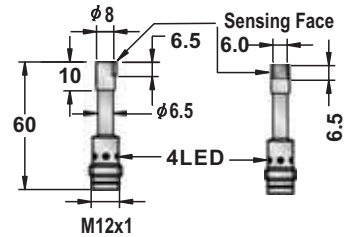

M 8		
●	●	
1.0mm	1.5mm	
stainless steel		
●		
10-30VDC or 5-36VDC		
<10%		
<10mA		
200mA		
<0.01mA		
-		
-		
<1.5V(10-30V) or <1.0V(5-36V)		
2KHZ		
0.1ms/0.1ms		
<15%(Sr)		
<1.0%(Sr)		
IP67		
-25℃ - +70℃		
<10%(Sr)		
YES		
220mA		
<10ms		
RFI>3V/m / EFT>1KV / ESD>4KV (contact)		
IEC 60947-5-2,Part 7.4.1 / IEC 60947-5-2,Part 7.4.2		
POM		
FCU1-0801N-A3U2T	1	
FCU1-0801N-B3U2T	2	
FCU1-0801P-A3U2T	3	
FCU1-0801P-B3U2T	4	
FCU1-0801NUT	21	FCU1-081.5NUT
	1	ICU1-081.5N-A3U2T
	2	ICU1-081.5N-B3U2T
	3	ICU1-081.5P-A3U2T
	4	ICU1-081.5P-B3U2T
5-36V: ICU*-******-**** type switching distance Sn=1.5mm.		
3 ϕ 2x0.15		
Approx.40 g		

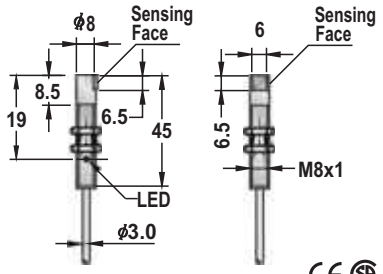

DC INDUCTIVE PROXIMITY SWITCH SQUARE TYPE

Q5x5x26	Q5x5x26	Q5x5x26
●	●	●
0.8 mm	0.8 mm	0.8 mm
die-cast	die-cast	die-cast
●	●	●
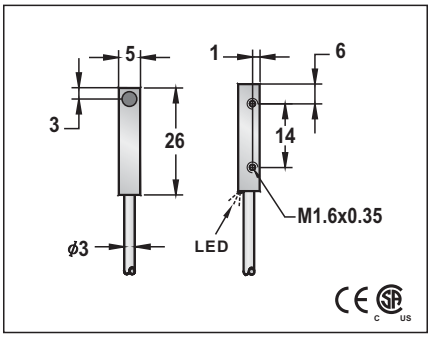	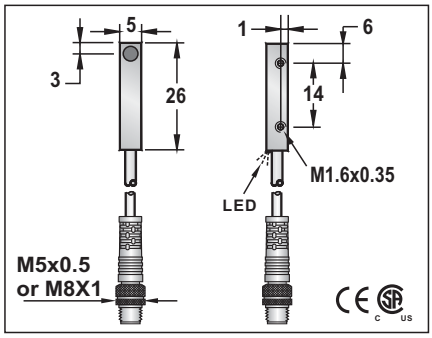	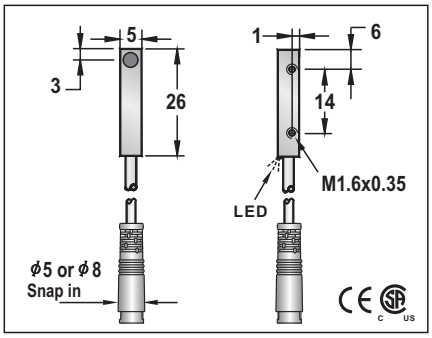
10-30VDC or 5-36VDC	10-30VDC or 5-36VDC	10-30VDC or 5-36VDC
<10%	<10%	<10%
<10mA	<10mA	<10mA
200mA	200mA	200mA
<0.01mA	<0.01mA	<0.01mA
-	-	-
-	-	-
<1.5V	<1.5V	<1.5V
2KHZ	2KHZ	2KHZ
0.1ms/0.1ms	0.1ms/0.1ms	0.1ms/0.1ms
<15%(Sr)	<15%(Sr)	<15%(Sr)
<1.0%(Sr)	<1.0%(Sr)	<1.0%(Sr)
IP67	IP67	IP67
-25°C - +70°C	-25°C - +70°C	-25°C - +70°C
<10%(Sr)	<10%(Sr)	<10%(Sr)
YES	YES	YES
220mA	220mA	220mA
<10ms	<10ms	<10ms
RFI>3V/m / EFT>1KV / ESD>4KV (contact)	RFI>3V/m / EFT>1KV / ESD>4KV (contact)	RFI>3V/m / EFT>1KV / ESD>4KV (contact)
IEC 60947-5-2,Part 7.4.1 / IEC 60947-5-2,Part 7.4.2	IEC 60947-5-2,Part 7.4.1 / IEC 60947-5-2,Part 7.4.2	IEC 60947-5-2,Part 7.4.1 / IEC 60947-5-2,Part 7.4.2
POM	POM	POM

FQM1-550.8N-A3U2T	1	FQM1-550.8N-A3U0.2T/P5	25	FQM1-550.8N-A3U0.2T/P8	29	FQM1-550.8N-A3U0.2T/SN5	25	FQM1-550.8N-A3U0.2T/SN8	29
FQM1-550.8N-B3U2T	2	FQM1-550.8N-B3U0.2T/P5	26	FQM1-550.8N-B3U0.2T/P8	30	FQM1-550.8N-B3U0.2T/SN5	26	FQM1-550.8N-B3U0.2T/SN8	30
FQM1-550.8P-A3U2T	3	FQM1-550.8P-A3U0.2T/P5	27	FQM1-550.8P-A3U0.2T/P8	31	FQM1-550.8P-A3U0.2T/SN5	27	FQM1-550.8P-A3U0.2T/SN8	31
FQM1-550.8P-B3U2T	4	FQM1-550.8P-B3U0.2T/P5	28	FQM1-550.8P-B3U0.2T/P8	32	FQM1-550.8P-B3U0.2T/SN5	28	FQM1-550.8P-B3U0.2T/SN8	32
IQM1-550.8N-A3U2T	1	IQM1-550.8N-A3U0.2T/P5	25	IQM1-550.8N-A3U0.2T/P8	29	IQM1-550.8N-A3U0.2T/SN5	25	IQM1-550.8N-A3U0.2T/SN8	29
IQM1-550.8N-B3U2T	2	IQM1-550.8N-B3U0.2T/P5	26	IQM1-550.8N-B3U0.2T/P8	30	IQM1-550.8N-B3U0.2T/SN5	26	IQM1-550.8N-B3U0.2T/SN8	30
IQM1-550.8P-A3U2T	3	IQM1-550.8P-A3U0.2T/P5	27	IQM1-550.8P-A3U0.2T/P8	31	IQM1-550.8P-A3U0.2T/SN5	27	IQM1-550.8P-A3U0.2T/SN8	31
IQM1-550.8P-B3U2T	4	IQM1-550.8P-B3U0.2T/P5	28	IQM1-550.8P-B3U0.2T/P8	32	IQM1-550.8P-B3U0.2T/SN5	28	IQM1-550.8P-B3U0.2T/SN8	32

NAMUR type specifications see page 23.	FQM***/P5 — M5 Pigtail mode FQM***/P8 — M8 Pigtail mode	FQM***/SN5 — ϕ5 Pigtail mode FQM***/SN8 — ϕ8 Pigtail mode
3.0ϕ3X0.15	3.0ϕ3X0.15	3.0ϕ3X0.15
Approx.30 g	Approx.30 g / Approx.31 g	Approx.30 g / Approx.31 g

DC INDUCTIVE PROXIMITY SWITCH SQUARE TYPE

Q5x8x40	Q5x8x40	Q5x8x40
●	●	●
0.8 mm	0.8 mm	0.8 mm
die-cast	die-cast	die-cast
●	●	●

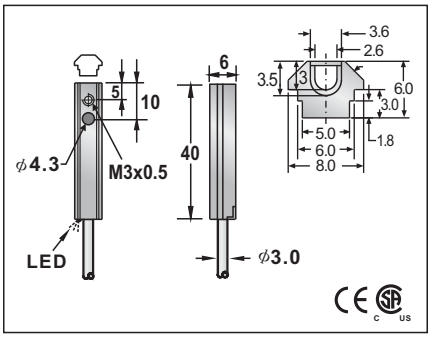

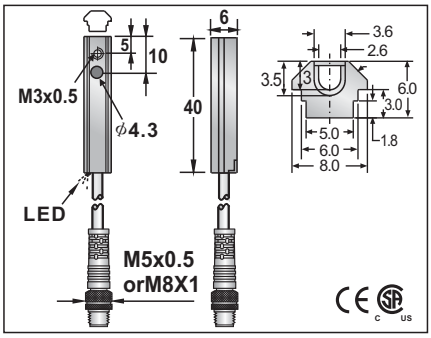

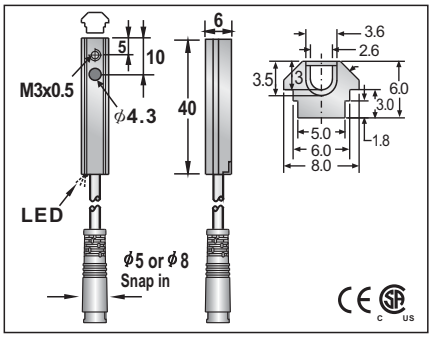

10-30VDC or 5-36VDC		10-30VDC or 5-36VDC		10-30VDC or 5-36VDC	
<10%		<10%		<10%	
<10mA		<10mA		<10mA	
200mA		200mA		200mA	
<0.01mA		<0.01mA		<0.01mA	
-		-		-	
-		-		-	
<1.5V		<1.5V		<1.5V	
2KHZ		2KHZ		2KHZ	
0.1ms/0.1ms		0.1ms/0.1ms		0.1ms/0.1ms	
<15%(Sr)		<15%(Sr)		<15%(Sr)	
<1.0%(Sr)		<1.0%(Sr)		<1.0%(Sr)	
IP67		IP67		IP67	
-25°C - +70°C		-25°C - +70°C		-25°C - +70°C	
<10%(Sr)		<10%(Sr)		<10%(Sr)	
YES		YES		YES	
220mA		220mA		220mA	
<10ms		<10ms		<10ms	
RFI>3V/m / EFT>1KV / ESD>4KV (contact)		RFI>3V/m / EFT>1KV / ESD>4KV (contact)		RFI>3V/m / EFT>1KV / ESD>4KV (contact)	
IEC 60947-5-2,Part 7.4.1 / IEC 60947-5-2,Part 7.4.2		IEC 60947-5-2,Part 7.4.1 / IEC 60947-5-2,Part 7.4.2		IEC 60947-5-2,Part 7.4.1 / IEC 60947-5-2,Part 7.4.2	
POM		POM		POM	
FQM1-580.8N-A3U2T	1	FQM1-580.8N-A3U0.2T/P5	25	FQM1-580.8N-A3U0.2T/P8	29
FQM1-580.8N-B3U2T	2	FQM1-580.8N-B3U0.2T/P5	26	FQM1-580.8N-B3U0.2T/P8	30
FQM1-580.8P-A3U2T	3	FQM1-580.8P-A3U0.2T/P5	27	FQM1-580.8P-A3U0.2T/P8	31
FQM1-580.8P-B3U2T	4	FQM1-580.8P-B3U0.2T/P5	28	FQM1-580.8P-B3U0.2T/P8	32
IQM1-580.8N-A3U2T	1	IQM1-580.8N-A3U0.2T/P5	25	IQM1-580.8N-A3U0.2T/P8	29
IQM1-580.8N-B3U2T	2	IQM1-580.8N-B3U0.2T/P5	26	IQM1-580.8N-B3U0.2T/P8	30
IQM1-580.8P-A3U2T	3	IQM1-580.8P-A3U0.2T/P5	27	IQM1-580.8P-A3U0.2T/P8	31
IQM1-580.8P-B3U2T	4	IQM1-580.8P-B3U0.2T/P5	28	IQM1-580.8P-B3U0.2T/P8	32

Q5x8x40	Q5x8x40	Q5x8x40
	FQM***/P5 — M5 Pigtail mode FQM***/P8 — M8 Pigtail mode	FQM***/SN5 — ϕ5 Pigtail mode FQM***/SN8 — ϕ8 Pigtail mode
3 ϕ 3x0.15	3.0ϕ3X0.15	3.0ϕ3X0.15
Approx.32 g	Approx.30 g / Approx.31 g	Approx.30 g / Approx.31 g

FQM1-580.8N-A3U0.2T/SN5	25	FQM1-580.8N-A3U0.2T/SN8	29
FQM1-580.8N-B3U0.2T/SN5	26	FQM1-580.8N-B3U0.2T/SN8	30
FQM1-580.8P-A3U0.2T/SN5	27	FQM1-580.8P-A3U0.2T/SN8	31
FQM1-580.8P-B3U0.2T/SN5	28	FQM1-580.8P-B3U0.2T/SN8	32
IQM1-580.8N-A3U0.2T/SN5	25	IQM1-580.8N-A3U0.2T/SN8	29
IQM1-580.8N-B3U0.2T/SN5	26	IQM1-580.8N-B3U0.2T/SN8	30
IQM1-580.8P-A3U0.2T/SN5	27	IQM1-580.8P-A3U0.2T/SN8	31
IQM1-580.8P-B3U0.2T/SN5	28	IQM1-580.8P-B3U0.2T/SN8	32

DC INDUCTIVE PROXIMITY SWITCH SQUARE TYPE

Q 8		
●		
1.0 mm	2.0 mm	3.0 mm
Nickel plated brass		
●		

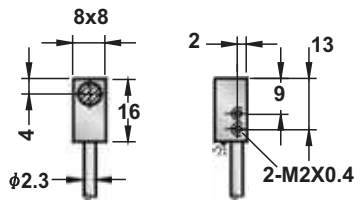

10-30VDC
<10%
<10mA
200mA
<0.01mA
-
-
<1.5V
2KHZ
0.1ms/0.1ms
<15%(Sr)
<1.0%(Sr)
IP67
-25°C - +70°C
<10%(Sr)
YES
220mA
<10ms
RFI>3V/m / EFT>1KV / ESD>4KV (contact)
IEC 60947-5-2,Part 7.4.1 / IEC 60947-5-2,Part 7.4.2
POM

FQM1-8801N-A3R2T	1	EQM1-8802N-A3R2T	1	LQM1-8803N-A3R2T
FQM1-8801N-B3R2T	2	EQM1-8802N-B3R2T	2	LQM1-8803N-B3R2T
FQM1-8801P-A3R2T	3	EQM1-8802P-A3R2T	3	LQM1-8803P-A3R2T
FQM1-8801P-B3R2T	4	EQM1-8802P-B3R2T	4	LQM1-8803P-B3R2T

Note:
All cable type have
pigtail connect mode,
*QM***/ p
pigtail mode

2.3ϕ3x0.15
Approx.20 g

Q 8		
●		
1.0 mm	2.0 mm	3.0 mm
Nickel plated brass		
●		

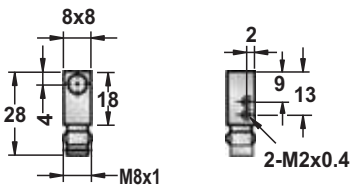

10-30VDC
<10%
<10mA
200mA
<0.01mA
-
-
<1.5V
2KHZ
0.1ms/0.1ms
<15%(Sr)
<1.0%(Sr)
IP67
-25°C - +70°C
<10%(Sr)
YES
220mA
<10ms
RFI>3V/m / EFT>1KV / ESD>4KV (contact)
IEC 60947-5-2,Part 7.4.1 / IEC 60947-5-2,Part 7.4.2
POM

FQM1-8801N-ACR3T	29	EQM1-8802N-ACR3T	29	LQM1-8803N-ACR3T
FQM1-8801N-BCR3T	30	EQM1-8802N-BCR3T	30	LQM1-8803N-BCR3T
FQM1-8801P-ACR3T	31	EQM1-8802P-ACR3T	31	LQM1-8803P-ACR3T
FQM1-8801P-BCR3T	32	EQM1-8802P-BCR3T	32	LQM1-8803P-BCR3T

Connecting cable:
M8 female pico-style screw locking with moulded cable.

Approx.25 g

DC INDUCTIVE PROXIMITY SWITCH SQUARE TYPE

Q 8		
●		
1.0 mm	2.0 mm	3.0 mm
Nickel plated brass		
●		

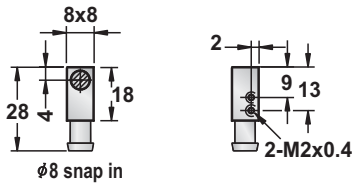

10-30VDC
<10%
<10mA
200mA
<0.01mA
-
-
<1.5V
2KHZ
0.1ms/0.1ms
<15%(Sr)
<1.0%(Sr)
IP67
-25°C - +70°C
<10%(Sr)
YES
220mA
<10ms
RFI>3V/m / EFT>1KV / ESD>4KV (contact)
IEC 60947-5-2,Part 7.4.1 / IEC 60947-5-2,Part 7.4.2
POM

FQM1-8801N-ACR3T/SN	29	EQM1-8802N-ACR3T/SN	29	LQM1-8803N-ACR3T/SN
FQM1-8801N-BCR3T/SN	30	EQM1-8802N-BCR3T/SN	30	LQM1-8803N-BCR3T/SN
FQM1-8801P-ACR3T/SN	31	EQM1-8802P-ACR3T/SN	31	LQM1-8803P-ACR3T/SN
FQM1-8801P-BCR3T/SN	32	EQM1-8802P-BCR3T/SN	32	LQM1-8803P-BCR3T/SN

Connecting cable:
Female pico-style snap-in device with moulded cable.

Approx.20 g

DC INDUCTIVE PROXIMITY SWITCH SQUARE TYPE

Q8	Q8	Q8
●	●	●
1.5 mm	1.5 mm	1.5 mm
die-cast	die-cast	die-cast
●	●	●

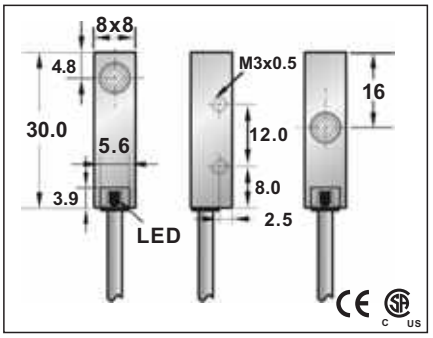

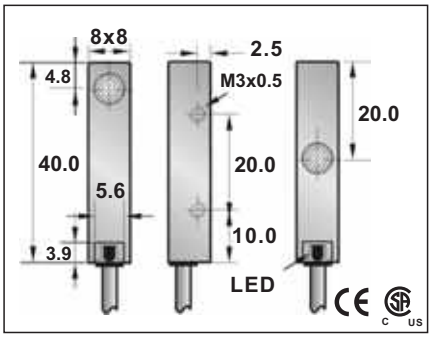

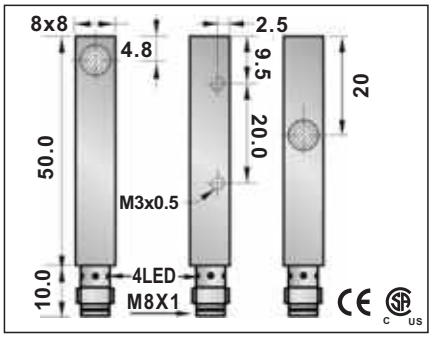

Q8	Q8	Q8
10-30VDC or 5-36VDC	10-30VDC or 5-36VDC	10-30VDC or 5-36VDC
<10%	<10%	<10%
<10mA	<10mA	<10mA
200mA	200mA	200mA
<0.01mA	<0.01mA	<0.01mA
-	-	-
-	-	-
<1.5V	<1.5V	<1.5V
2KHZ	2KHZ	2KHZ
0.1ms/0.1ms	0.1ms/0.1ms	0.1ms/0.1ms
<15%(Sr)	<15%(Sr)	<15%(Sr)
<1.0%(Sr)	<1.0%(Sr)	<1.0%(Sr)
IP67	IP67	IP67
-25°C - +70°C	-25°C - +70°C	-25°C - +70°C
<10%(Sr)	<10%(Sr)	<10%(Sr)
YES	YES	YES
220mA	220mA	220mA
<10ms	<10ms	<10ms
RFI>3V/m / EFT>1KV / ESD>4KV (contact)	RFI>3V/m / EFT>1KV / ESD>4KV (contact)	RFI>3V/m / EFT>1KV / ESD>4KV (contact)
IEC 60947-5-2,Part 7.4.1 / IEC 60947-5-2,Part 7.4.2	IEC 60947-5-2,Part 7.4.1 / IEC 60947-5-2,Part 7.4.2	IEC 60947-5-2,Part 7.4.1 / IEC 60947-5-2,Part 7.4.2
PBT	PBT	PBT

FQM1-881.5N-A3S2T	1	FQM1-881.5N-A3S2M	FQM1-881.5N-A3U2T	1	FQM1-881.5N-A3U2M	FQM1-881.5N-ACU3T	29	FQM1-881.5N-ACU3M
FQM1-881.5N-B3S2T	2	FQM1-881.5N-B3S2M	FQM1-881.5N-B3U2T	2	FQM1-881.5N-B3U2M	FQM1-881.5N-BCU3T	29	FQM1-881.5N-BCU3M
FQM1-881.5P-A3S2T	3	FQM1-881.5P-A3S2M	FQM1-881.5P-A3U2T	3	FQM1-881.5P-A3U2M	FQM1-881.5P-ACU3T	30	FQM1-881.5P-ACU3M
FQM1-881.5P-B3S2T	4	FQM1-881.5P-B3S2M	FQM1-881.5P-B3U2T	4	FQM1-881.5P-B3U2M	FQM1-881.5P-BCU3T	30	FQM1-881.5P-BCU3M
IQM1-881.5N-A3S2T	1	IQM1-881.5N-A3S2M	IQM1-881.5N-A3U2T	1	IQM1-881.5N-A3U2M	IQM1-881.5N-ACU3T	29	IQM1-881.5N-ACU3M
IQM1-881.5N-B3S2T	2	IQM1-881.5N-B3S2M	IQM1-881.5N-B3U2T	2	IQM1-881.5N-B3U2M	IQM1-881.5N-BCU3T	29	IQM1-881.5N-BCU3M
IQM1-881.5P-A3S2T	3	IQM1-881.5P-A3S2M	IQM1-881.5P-A3U2T	3	IQM1-881.5P-A3U2M	IQM1-881.5P-ACU3T	30	IQM1-881.5P-ACU3M
IQM1-881.5P-B3S2T	4	IQM1-881.5P-B3S2M	IQM1-881.5P-B3U2T	4	IQM1-881.5P-B3U2M	IQM1-881.5P-BCU3T	30	IQM1-881.5P-BCU3M

top sensing style center sensing style

top sensing style center sensing style

top sensing style center sensing style

3.0ϕ3X0.15	3.0ϕ3X0.15	
Approx.38 g	Approx.38 g	Approx.38 g

DC INDUCTIVE PROXIMITY SWITCH SQUARE TYPE

Q 12	Q 12	Q 12
●	●	●
2 mm	2 mm	2 mm
die-cast	die-cast	die-cast
●	●	●
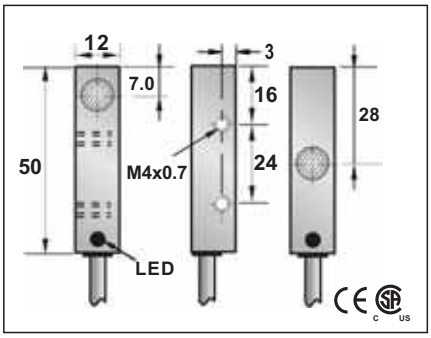	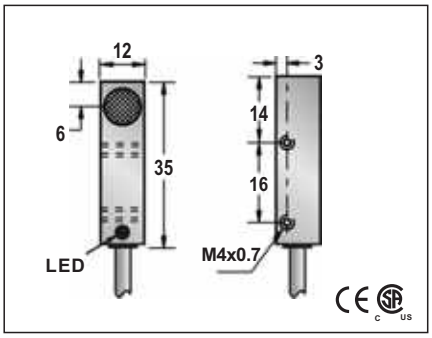	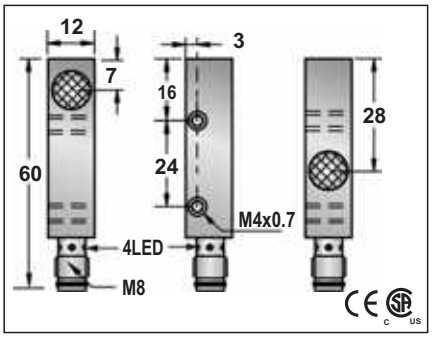
10-30VDC or 5-36VDC or 10-55VDC	10-30VDC or 5-36VDC	10-30VDC or 5-36VDC or 10-55VDC
<10%	<10%	<10%
<10mA <20mA	<10mA	<10mA <20mA
200mA	200mA	200mA
<0.01mA	<0.01mA	<0.01mA
-	-	-
-	-	-
<1.5V or <1.0V or <2.0V	<1.5V(10-30V) or <1.0V(5-36V)	<1.5V or <1.0V or <2.0V
2KHZ	2KHZ	2KHZ
0.1ms/0.1ms	0.1ms/0.1ms	0.1ms/0.1ms
<15%(Sr)	<15%(Sr)	<15%(Sr)
<1.0%(Sr)	<1.0%(Sr)	<1.0%(Sr)
IP67	IP67	IP67
-25 °C - +70 °C	-25°C - +70°C	-25 °C - +70°C
<10%(Sr)	<10%(Sr)	<10%(Sr)
YES	YES	YES
220mA	220mA	220mA
<10ms	<10ms	<10ms
RFI>3V/m / EFT>1KV / ESD>4KV (contact)	RFI>3V/m / EFT>1KV / ESD>4KV (contact)	RFI>3V/m / EFT>1KV / ESD>4KV (contact)
IEC 60947-5-2,Part 7.4.1 / IEC 60947-5-2,Part 7.4.2	IEC 60947-5-2,Part 7.4.1 / IEC 60947-5-2,Part 7.4.2	IEC 60947-5-2,Part 7.4.1 / IEC 60947-5-2,Part 7.4.2
POM	POM	POM
		FQM1-1202N-ACU3T 29 FQM1-1202N-ACU3M
		FQM1-1202N-BCU3T 29 FQM1-1202N-BCU3M
		FQM1-1202P-ACU3T 30 FQM1-1202P-ACU3M
		FQM1-1202P-BCU3T 30 FQM1-1202P-BCU3M
top sensing style center sensing style	Please see Page 18 for details and specifications of DC 2-Wire models on this page.	top sensing style center sensing style
4 ϕ 3x0.15	4ϕ 3x0.15	
Approx.75 g	Approx.70 g	Approx.38 g

DC INDUCTIVE PROXIMITY SWITCH SQUARE TYPE

Q16x28x10		Q16x28x10	
●	○	●	○
1 mm	2 mm	1 mm	2 mm
die-cast		die-cast	
●		●	

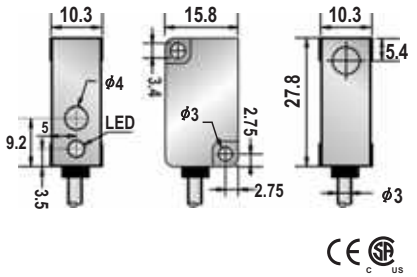

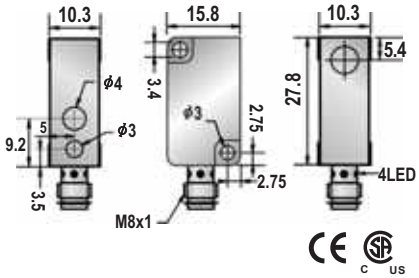

10-30VDC or 5-36VDC			10-30VDC or 5-36VDC		
<10%			<10%		
<10mA			<10mA		
200mA			200mA		
<0.01mA			<0.01mA		
-			-		
-			-		
<1.5V			<1.5V		
2KHZ			2KHZ		
0.1ms/0.1ms			0.1ms/0.1ms		
<15%(Sr)			<15%(Sr)		
<1.0%(Sr)			<1.0%(Sr)		
IP67			IP67		
-25°C - +70°C			-25°C - +70°C		
<10%(Sr)			<10%(Sr)		
YES			YES		
220mA			220mA		
<10ms			<10ms		
RFI>3V/m / EFT>1KV / ESD>4KV (contact)			RFI>3V/m / EFT>1KV / ESD>4KV (contact)		
IEC 60947-5-2,Part 7.4.1 / IEC 60947-5-2,Part 7.4.2			IEC 60947-5-2,Part 7.4.1 / IEC 60947-5-2,Part 7.4.2		
POM			POM		
FQM1-2801N-A3U2	1	FQM2-2802N-A3U2	FQM1-2801N-ACU3	29	FQM2-2802N-ACU3
FQM1-2801N-B3U2	2	FQM2-2802N-B3U2	FQM1-2801N-BCU3	29	FQM2-2802N-BCU3
FQM1-2801P-A3U2	3	FQM2-2802P-A3U2	FQM1-2801P-ACU3	30	FQM2-2802P-ACU3
FQM1-2801P-B3U2	4	FQM2-2802P-B3U2	FQM1-2801P-BCU3	30	FQM2-2802P-BCU3

Please see Page 18 for details and specifications of DC 2-Wire models on this page.

3.0ϕ3X0.15		
Approx.60 g	Approx.60 g	