Proxitron
Sensoren für Automation

Piros Laser-Thru-Beam Sensors
LLSB 501.23 G (Receiver)

Piros thru-beam sensor for material monitoring and object detection in steel and rolling mills.

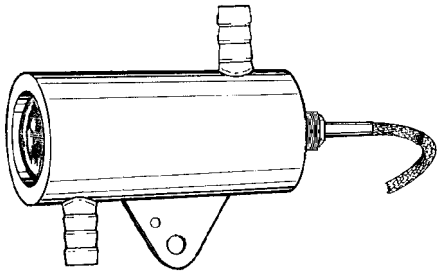

Technical data

Type	LLSB 501.23 G
Art.-No.	5106A
Function	receiver
Usable with transmitter	LLAB 501.2 Art.-No. 5107A
Range	50 m
Permissible ambient light	5000 lux
Output closed by beam-interruption	normally open
Supply voltage	10 – 30 V DC
Ripple voltage	< 15%
Load current max.	0 - 100 mA
Short circuit protection	yes
No-Load current	< 20 mA
Voltage drop	< 2 V
Operating frequency	1500 Hz
Ambient temperature	-10 ... +50 °C without cooling
Protection class	IP 67
Connection	2 m POKT-Therm cable
Function display	LED
Housing material	stainless steel with cooling jacket

Diagram of Connections

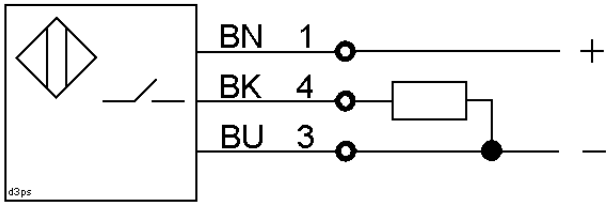

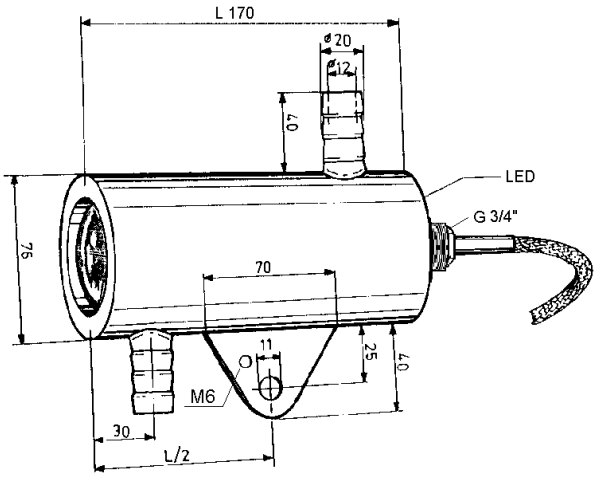

Proxitron GmbH - Gärtnerstr. 10 - D-25335 Elmshorn - Tel. 04121/2621-0 - Fax. 04121/24404 - mail@proxitron.de